# THERMOELECTRIC PRODUCTS

Catalog NO.

13

Air Conditioners

Cold Plates

Liquid Chillers

Temperature Controllers

Accessories

teca

www.teca-usa.com

Thermoelectric Cooling America Corporation

4048 West Schubert Avenue, Chicago, Illinois 60639 USA

Phone 773.342.4900
Toll-free 888.TECA-USA (888.832.2872)
Fax 773.342.0191
email sales@thermoelectric.com

Hello!

Sometimes I think my interest in thermoelectric cooling and excitement about its potential for so many different applications has a genetic basis. I vividly remember back in the early '60s, my dad—an inveterate tinkerer— came home from work with an armful of thermoelectric components and a fascination with the possibilities they presented. Of course, little did I suspect at the time that I was glimpsing my future.

Thermoelectric cooling has come a long way since the early research conducted by some of the biggest names in the industry, such as Westinghouse, Borg-Warner, General Electric, and 3M. I take great pride in TECA's pioneering role in developing solid-state air conditioners for electronic enclosures. As you'll see in this catalog, today we offer a full line of cooling products from air-cooled and liquid-cooled air conditioners, to cold plates and liquid chillers, plus a wide range of accessories.

But our versatile, quality products are only part of the picture. I am also extremely proud of the dedication that the entire TECA team consistently demonstrates to you, our customers. We are committed to understanding your needs and working with you to design solutions that exceed your expectations.

Remember, when heat is your enemy—TECA is your friend. Give us a call at 888-TECA-USA (888-832-2872) and let us show you what we can do to help you.

Sincerely,

Mike Mikalauskis
President

# About TECA

## What We Stand On

### Our mission

**TECA**'s fundamental purpose is to provide world-class products of superior quality. Our goal is to continue setting the standard in thermoelectric cooling by monitoring and improving our operations to meet our customers' needs and exceed their expectations.

A former division of Borg-Warner, **TECA** was spun-off as an independent company in 1984.

Today the Chicago-based corporation manufactures a wide range of solid state cooling products, including air-cooled and liquid-cooled air conditioners, cold plates, and liquid chillers.

### Our guiding principles

Quality is our top priority. We are "**TEAM TECA**," recognizing that our success depends upon the involvement, commitment, and performance of every team member, including suppliers.

### How to use this catalog

We hope you'll view this catalog as a working guide to the possibilities of thermoelectric cooling. We've included a foundation of information designed to help you think about the applications for your company, in addition to detailed descriptions of the off-the-shelf products we offer.

TEAM TECA
CUSTOM
ENGINEERING

### Our solutions

We can fulfill all of your cooling requirements, whatever your application. In fact, our engineers may have already developed a solution for an application similar to yours.

We offer complete engineering services, prototype development, and custom-built cooling equipment on an exclusive and confidential basis, enabling us to meet the needs of all our customers, including those in the Original Equipment Market.

We will continue to focus our efforts on the people we serve and the products we produce in order to ensure quality without sacrificing health, safety, or the environment in which we live.

### TECA web site

There are numerous things you can get from the web site that you can not get from this catalog! www.thermoelectric.com

- Drawings and 3D solid model of most products.
- Product Information Packets are downloadable. These are the installation and service documents and schematics which are shipped with the products when you buy them.
- Example applications.
- This catalog is downloadable, so you can print pages or sections of interest for your own use.
- The site is often updated with news and other current items of interest ...articles, stories, links, etc.
- Teca Sizing Software is downloadable. This is a handy, easy to use program which is very helpful in choosing air conditioners of the appropriate capacity for your job.

Please keep in mind that we are always willing and available to customize existing products or to design and build new products to meet your needs.
**Call us at 888-TECA-USA – we're here to help!**
**888-832-2872**

© 2011 TECA Corporation

## TABLE OF CONTENTS


| | |
|---|---|
| **General Information** | |
| Thermoelectric Technology | 2 |
| Product notes | 3 |
| A/C Notes | 4 |
| CP Notes | 6 |
| TLC Notes | 10 |
| Ratings & Curves | 12 |
| **Products** | |
| **Air Conditioners-Air Cooled** | **14** |
| **Through Mounted** | |
| AHP-1800 | 18-23 |
| AHP-1802XP | 24-25 |
| AHP-1501 | 26-29 |
| AHP-1400 | 30-31 |
| AHP-1200 | 32-37 |
| AHP-1200CXP (North American) | 38-39 |
| AHP-1200CXP (EU; UK) | 40-41 |
| AHP-500 | 42-43 |
| AHP-401, AHP-400 | 44-47 |
| AHP-301FF, AHP-300FF | 48-51 |
| AHP-150FF | 52-53 |
| **Flush Mounted** | |
| FHP-2850 | 54-55 |
| FHP-1501 | 56-59 |
| FHP-750 | 60-63 |
| FHP-500 | 64-65 |
| FHP-401, 400 | 66-69 |
| A/C Accessories | 70-71 |
| **Air Conditioners-Liquid Cooled** | **72** |
| LHP-1700FF | 74-75 |
| LHP-1200FF | 76-77 |
| LHP-800FF | 78-79 |
| LHP-300FF | 78-79 |
| **Cold Plates-Air Cooled** | **80** |
| **Laboratory Use** | |
| AHP-1200CPV | 82-83 |
| AHP-1200DCP | 84-85 |
| AHP-301CPV | 86-87 |
| AHP-800MSP | 88-89 |
| Gradient Bar | 90-81 |
| CPV Cascade & Accessories | 92-95 |
| **General Purpose** | |
| AHP-1200CP | 96-99 |
| AHP-301CP | 100-101 |
| AHP-300CP | 102-103 |
| AHP-150CP | 102-103 |
| **Cold Plates- Liquid Cooled** | **80** |
| LHP-1700CP | 104-105 |
| LHP-1200CP | 106-107 |
| LHP-800CP | 108-109 |
| LHP-300CP | 108-109 |
| LHP-150CP | 108-109 |
| **Liquid Chillers** | **110** |
| TLC-1400 | 112-113 |
| TLC-900 | 114-115 |
| TLC-1200 | 116-117 |
| TLC-700 | 118-119 |
| RLC-900 | 120-121 |
| RLC-1800 | 120-121 |
| RLC-1400 | 122-123 |
| TLC³ | 124-125 |
| TLC Accessories | 126-127 |
| **Controls & Supplies** | **128** |
| TC-4600 | 132-133 |
| TC-3400 | 134-135 |
| TC-3500 | 136-137 |
| TC-1F, TC-6F, TC-3F, TC-7F | 138 |
| Relays | 139 |
| TC Accessories | 140 |
| Power Supplies | 141 |

## The Peltier Effect

**Thermoelectric cooling, is a solid-state method of heat transfer through dissimilar semiconductor materials.**
It is also called "the Peltier Effect" after the French watchmaker who discovered the phenomenon in the early 19th century. Like their conventional refrigeration counterparts, thermoelectric cooling systems obey the basic laws of thermodynamics. However, the actual system for cooling is different.

**In a conventional refrigeration system, the main working parts are the evaporator, condenser, and compressor.**
The evaporator surface is where the liquid refrigerant boils, changes to vapor, and absorbs heat energy. The compressor circulates the refrigerant and applies enough pressure to increase the temperature of the refrigerant above ambient level. The condenser helps discharge the absorbed heat into surrounding room air.

**The three main working parts in a thermoelectric refrigeration system are a cold junction, a heat sink, and a DC power source.**
Two dissimilar conductors replace the refrigerant in both liquid and vapor form. The cold sink (evaporator surface) becomes cold through absorption of energy by the electrons as they pass from one semiconductor to another, instead of energy absorption by the refrigerant as it changes from liquid to vapor. The DC power source pumps the electrons from one semiconductor to another, and the heat sink (condenser) discharges the accumulated heat energy from the system.

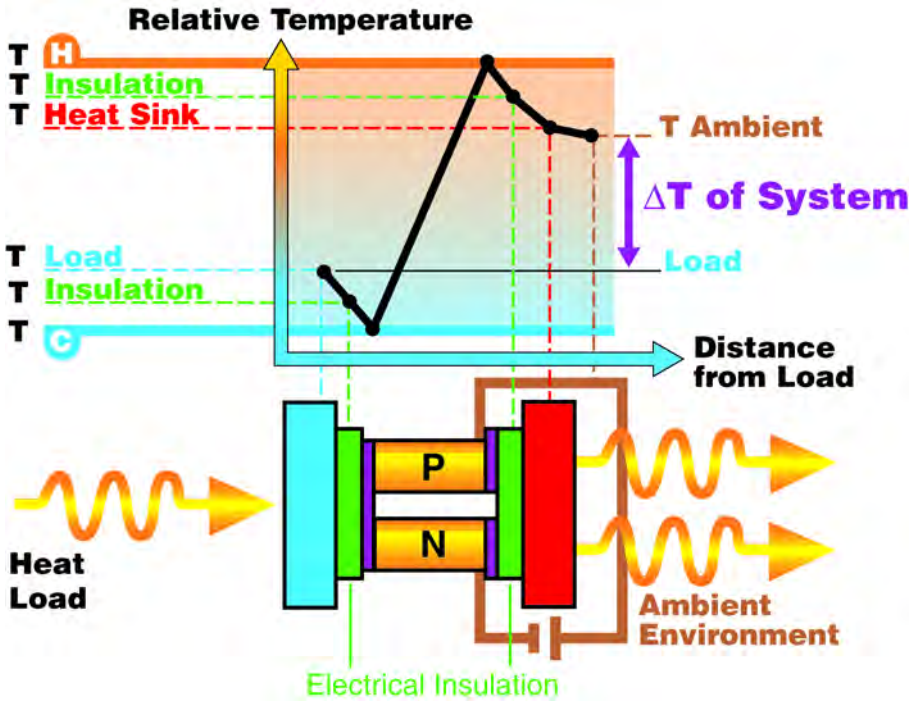


**Therefore, the thermoelectric cooling system refrigerates without refrigerant and without the use of mechanical devices, except perhaps in the auxiliary sense.**
The semiconductor materials used in thermoelectric cooling are N and P type, named because they either have more electrons than necessary to complete a perfect molecular lattice structure (N-type) or not enough electrons (P-type). The extra electrons in the N-type material and the holes left in the P-type material are called "carriers," responsible for moving the heat energy from the cold to the hot junction. Good thermoelectric semicon ductor materials such as bismuth telluride greatly impede conventional heat conduction from hot to cold areas, yet provide an easy flow for the carriers.

# Product Notes

## General Product Notes:

**TECA** builds both air cooled and liquid cooled products. The model numbers of the products (example: AHP-1200XMHC) can be very descriptive of the product. Air cooled products (prefix -AHP) use fans and finned heat sinks to transfer heat. Liquid cooled products (prefix-LHP) require a flow of water or cooling fluid to dissipate the heat. Most product families offer a selection of DC or AC voltages and temperature controllers detailed with complete part numbers on their individual catalog pages. Standard and custom air conditioners, cold plates (suffix-CP and CPV) and liquid chillers (prefix-TLC) are all made by **TECA**. Cooling is standard and heating can be optional or standard. Products capable of both heating and cooling typically but not always include **"HC"** in the suffix. The heating can be from resistive heaters or via reverse polarity (rev. pol.) input to the thermoelectrics.

## Air Conditioners:

Air conditioners come in many styles to meet many needs. These styles are indicated by the prefix and the suffix in the model number. The suffixes are **"AHP"**, air cooled heat pump, **"FHP"**, flush mount heat pump, and **"LHP"**, liquid cooled heat pump. **"AHP"** air conditioners mount through an enclosure wall with the cold side heat exchanger inside and the hot side heat exchanger outside of the enclosure. **"FHP"** air conditioners do not protrude into the enclosure. Products ending in **"X"** such as the AHP-1200X are for harsh environments. Military grade fans are used on the environment (hot) side of the units. Power supply components exposed to the environment are sealed from the environment. One step more rugged is the **"XM"** line of products. These products go the extra step of using military grade fans on both the hot (environment) side and the cold (enclosure) side. These products can typically handle more shock and vibration, especially along the fans axis of rotation. One step less rugged is the **"XE"** line of products. These are still suitable for outdoor environments and hose down applications. Rather than a military grade fan they use sealed industrial grade fans suited to the environment. Power supply components exposed to the environment are also sealed. **"XP"** style products are designed for hazardous (explosive) environments. They typically use military grade fans on the exposed side of the unit with other design modifications required for the environment. Most have been evaluated by a NRTL as if they were open to the environment. **"CXP"** style products on the other hand require a source of compressed air and are usually used on purged systems. NRTL evaluations are then performed on the entire system. Those products whose model number has no suffix or end in **"FF"** are for more benign factory, laboratory or office environments on NEMA 12 enclosures or similar. The products whose model numbers start with **"LHP"** use a liquid plate heat exchanger. By their nature these products do not have to be exposed to the environment at all. They can be mounted so they are completely inside of the enclosure. For this reason the suffixes described above are used but they are not as completely descriptive as they are for the air cooled series.

## Cold Plates:

Cold plates are also offered in air and liquid cooled versions. The cold plate itself is a flat aluminum plate. The prefixes **"AHP"** and **"LHP"** and suffixes **"CP"**, **"CPHC"** and **"CPV"** are also used as descriptive modifiers in cold plate model numbers. **"CPV"** style cold plates were designed to fill most laboratory and bench top needs. Features such as heating, temperature control, ramp/soak programming, remote sensors and communications are standard on **"CPV"** products. **"CP"** style products are general utility type cold plates often used as components in other products, in product assembly or testing, as prototypes for future OEM development or where simple direct contact cooling with no bells or whistles is required. They can be mounted to enclosures, walls or structures.

## Liquid Chillers:

Standard liquid chillers (prefix-TLC and RLC) are all air cooled products. They come in versions VAC or VDC, with or without temperatures controls or pumps. The TLC-1200 is a compact general purpose liquid chiller. The TLC-700 is a compact liquid chiller including reservoir, pump and several controller options. The TLC-900 offers the highest capacity in a benchtop unit, best control and the largest selection of pumps. The **"RLC"** products are rack mounted liquid chillers offering all of the features of the TLC-900, the highest capacity in 19" rack mount configuration. The **"TLC"** cubed products are for building into OEM applications, come in many capacities and a wide selection of input voltages.

# Air Conditioner Notes

## Things you need to know to start sizing an air conditioner:

**Temperatures:** The **ambient** is the air temperature around the enclosure also refered to as **operating temperature**, often the room temperature. The **enclosure temperature** or the **interior temperature** is the temperature range you wish to maintain inside the enclosure. The difference between the two is the design temperature differential **(delta T)**. Look at these temperatures with care. What is the real maximum ambient? What is the real maximum enclosure temperature? How can I define these? Ask maintenance or those who work in the area. Look at the temperature specs of the equipment inside. You may want 72 F in your enclosure but is it really necessary? Would 95 F be just as acceptable with occasional excursions to 104 F under worst case conditions? Do not impose unrealistic demands.

**Heat Loads Active and Ambient:** We define an active load as any source of heat inside the enclosure. Waste electric heat or exothermic reactions are examples. This can be determined in several ways. The first is by simply adding up the amount of heat generated by each component. This sounds easy but the information is often not readily available in component spec sheets and requires direct inquiries to manufacturers. A second method is to apply a control volume approach and to measure the total electrical input and output, subtract the two and assume the remainder has been turned into heat. Another method requires knowledge of the thermal characteristics of the enclosure, how many degrees does it rise given a defined amount of internal heat generation. This can be found by monitoring internal and external temperatures and varying a known internal load while bringing the system to equilibrium between each step and recording the values. Use these numbers to determine the degrees per watt enclosure characteristic. Once this characteristic of the enclosure is known the system can be operated to steady state, the ambient and enclosure temperatures measured and a quick calculation made to estimate the amount of internal heat generated. An ambient load is that amount of heat added to the enclosure due to ambient conditions. The usual ambient load is that caused by the temperature difference between the enclosure and the ambient. It is a function of the enclosure thermal characteristics (size, insulation, seals, windows etc…). The same value determined experimentally as described above can be used to estimate the ambient load. Outdoor applications often have an additional solar component. Indoor applications can have something similar if for instance they are in close proximity to a heat source such as a furnace.

**Performance Curves:** The total load and temperature differential (dT) can be applied to the performance curves of the air conditioners to determine if the capacity is sufficient. Complete details on this process can be found on Page 10.

## Things you should consider when selecting an air conditioner:

**Purpose:** What is the real need for cooling: maintaining electronics temperatures, precision temperature control, maintaining sample temperatures, cooling a process? Answering these questions will ascertain the need for an air conditioner and help in selecting the control types and methods.

**Temperature Control:** Several control options are available. The most widely used controls are the TC-6F cool only temperature control set to its 35 C setting and the TC-3F heat/cool control. This setting provides a comfortable temperature for the electronics, minimizes chances of condensation and an efficient duty cycle for the air conditioner. For tighter control, air conditioners set up for remote control via an umbilical cord are used in conjunction with TC-3300/3400/4300 or customer supplied controls. These units typically require a 3 to 32 VDC drive signal to turn the heating or cooling on. Buck heating control where the air conditioner is on 100% of the time and control is provided through a separate heater is another option. P, PI, PID and PWM control schemes have all been used with success. There is one caution regarding input surges when trying to get tight temperature control with AC input units. Each application should be evaluated independently to assure safe and proper control.

**Environment:** IP and NEMA both define the types of environments one might find. We've included those types of designations with the air conditioners to help you select the right one for your environment. In general our standard air conditioners can handle factory and office environments, "XE" style are appropriate for many wet factory environments and outdoors, "X" style can handle a bit more rugged environment, the "XM" style employ military fans throughout and have been customer tested to survive severe shock and vibration in all axes while "XP" units can handle harsh indoor/outdoor hazardous locations.

**Power Input:** Air conditioners requiring 110 VAC, 220 VAC, 110/220 VAC, 12 VDC, 24 VDC and 12/24/48 VDC are available. Inquiries for other inputs are welcome.

**Cooling Medium:** Are you looking for an air (fan) cooled air conditioner (AHP and FHP products)? Is a liquid cooled version appropriate for your application (LHP products)? Perhaps the environment rules both fan and liquid cooled out. Is compressed air available (AHP-CXP products)?

**Enclosure size and characteristics:** How big is it? The bigger it is the more heat it transfers in and out. Is it insulated? Does it have any features that will interfere with mounting an air conditioner? Is it appropriate for the environment? Does it have windows and access ports which will affect the amount of cooling required? Can you protect it from external loads by using solar shades or shields? Will the enclosure, its contents and the air conditioner mesh well together?

**Air Conditioner Mounting:** These air conditioners can be mounted in any orientation, wall mounted is usually best. There are two types of mounting styles available, through mount where the cold side of the air conditioner extends into the enclosure and flush mount where there is no or minimal protrusion into the enclosure. Regardless of which style chosen it is important to orient the air conditioner in such a way that it compliments rather than hinders internal air circulation. Internal fans (cold side fans) typically run continuously to provide a constant internal air flow. External fans cycle with demand.

**Condensation Concerns:** The best time to address condensation concerns is in the selection of the air conditioner. Will conditions be ripe for condensation to occur? Condensation may form on the fins when their surface temperature goes below the dew point temperature. Use the "Cold Sink" equations provided for each product with your total load value in this equation to determine the delta T and therefore the actual temperature of the cold side heat exchanger. Compare this value to the expected dew point to see if condensation might occur. The 35 C setting of the TC-6F temperature control goes a long way in minimizing moisture. Set it to the 25 C or continuous on position and you may be setting yourself up for problems because the cold side fins will get that much colder. Side, front, or back mounting is recommended if there are condensation concerns. Many flush mount units come with condensate control systems which soak up moisture and transport it away. There are drip pan accessories for through mount air conditioners to collect and remove moisture. See page 52, Air Conditioner Accessories for more details on drip pans.

# Air Conditioner Applications

## FOOD PROCESSING

**PROBLEM:** Heat sinks collect materials in food processing plant ... if they are not washed clean.
A long standing customer with food processing plants has used dozens of TECA Model AHP1200X air conditioners over the years. The air-conditioners worked great, except for one thing..... after years of service, the units would come back to TECA with their heat sinks and fans clogged with a hardened paste which seems to be made from corn flower, water and dirt!
**SOLUTION:** Change from air to liquid cooling of the customer's equipment.
Working with this customer for a better solution; TECA developed a liquid cooled version of AHP1200X. This means that there is no heat sink and no fan on the outside of the customer's enclosure. This customer uses available re-cycling plant water coupled with TECA's liquid heat exchanger to remove the waste heat.

## FOOD PROCESSING

**PROBLEM:** A leading manufacturer of video cameras and mobile electronics communications for law enforcement needed a dependable thermoelectric cooler. The company had been "thrown for a loop" when their previous thermoelectric vendor admitted that they couldn't meet the delivery promised on a standard cooling assembly.

**SOLUTION:** In a span of a week TECA managed to build and deliver 16 custom units based on standard AHP-150FF air conditioners that met customer application needs.

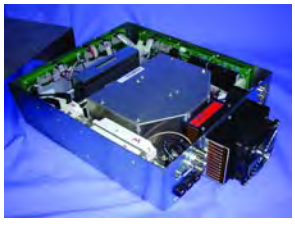

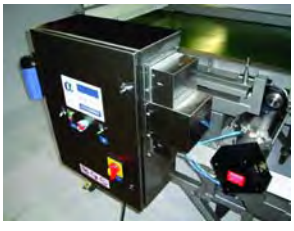

## FOOD PROCESSING

**PROBLEM:** A European manufacturer of special equipment for processing fruits and vegetables needed to cool sensitive electronics on their line of produce-processing machines, which sort produce by color, size and weight.
**SOLUTION:** TECA Model AHP1200XE solid state air conditioners.
The equipment in use is washed down frequently. The Model AHP1200XE is ideal because it is designed to meet NEMA4, is suitable for wash-down environments and also carries the CE Mark.

## VIDEO PROJECTION

**PROBLEM:** A ruggedized enclosure for a military video projector caused excessive heat to build up from the high wattage bulb.
**SOLUTION:** A more rugged version of TECA's AHP-1200FF thermoelectric cooler / solid state air conditioner is used by the military to cool a projector.

## MILITARY COMMUNICATIONS

**PROBLEM:** A branch of the US military had a need for cooling a small enclosure containing a critical voice communication system. The shipboard system had to be resistant to salt water corrosion as well as pass stringent shock and vibration testing.

SOLUTION: A modification to TECAs AHP-300X solid air conditioner allowed the unit to meet specializing and air flow requirements and pass these tests. The challenge was to overcome the small available space both inside and outside the enclosure. The heat sinks were turned so that the heat rejection air flow and internal cold side air flow moved in different directions.
This unit is a prime example of how flexible Team TECA is when customer needs require customization of standard products.

## AVIONICS MAINTENANCE

**PROBLEM:** Create a portable cooling system for diagnostic equipment to allow troubleshooting of avionics systems while still installed. Troubleshooting and diagnosing avionics problems is hard enough on the bench. To save valuable time, technicians would rather get it done while the electronics are still in the aircraft. Also, under harsh environments, it is difficult to keep cutting edge electronics functioning the way they should.
**SOLUTION:** When it came to the type of portable cooling for the diagnostic equipment required for these jobs; a navy contractor came to TECA for the solution. We helped design and build the solution shown in its prototype form around the portable enclosure. TECA completed the project on a tight schedule, which called for teamwork and attention to detail.

# General Use Cold Plate Notes

## Things you need to know to start sizing a cold plate:

**Temperatures:** The ambient temperature is the air temperature around the cold plate, often the room temperature. The desired temperature can be at the cold plate or at a location on the item being cooled. This means that the cold plate might be colder than the item being cooled. The difference between the two is the design temperature differential (delta T). Make sure to use the cold plate temperature when working with the performance curves.

**Heat Loads Active and Ambient:** We define an active load as any source of heat. Waste electric heat or exothermic reactions are examples. Loads can also be related to the specific heat of a sample when cycle times are important. Ambient loads are caused by the temperature differential between the ambient and the item being cooled. An un-insulated test item will have a higher ambient load than an insulated one.

**Performance Curves:** The total load and temperature differential (delta T) can be applied to the performance curves of the cold plates to determine if the capacity is sufficient. Complete details on this process can be found on Page 10.

## Things you should consider when selecting cold plate:

**Purpose:** What is the real need for cooling: maintaining electronics temperatures, precision temperature control, maintaining sample temperatures, cooling a process, temperature cycling? Answering these questions will help in selecting the correct cold plate, control types and methods.

**Temperature Control:** Many applications simply require cooling with no fancy temperature controls. The CP style of products often best fit these needs. When better control and more control features are needed the CPV series is often the best choice . Each application should be evaluated independently to assure safe and proper control.

**Environment:** In general our standard cold plates can handle factory, lab and office environments. No standard unit is made for outdoor or washdown environments. Typical locations are bench top, under bench and installed on an enclosure. Custom versions have been made for many environments.

**Power Input:** Cold plates requiring 120 VAC, 240 VAC, 120/240 VAC, 12VDC, 24 VDC and 12/24/48 VDC are available.

**Cooling Medium:** TECA has both air cooled and liquid cooled cold plates. When using the liquid cooled versions the delta T reference temperature is the liquid temperature, when using air cooled cold plates it's the ambient air temperature. Liquid cooled cold plates require a constant flow of cooling water. This can be tap water, in house chilled water or re-circulating chillers.

**Mounting:** Secure thermally conductive mounting of the componenets to cold plate surface is needed. The CPV versions are bench top units and the standard cold plate comes with no provision for mounting. The cold plate is a smooth flat aluminum surface. Items can be thermally greased into place using DOW 340 heat transfer grease or similar. Many times the tackiness of the grease is enough to hold the test item in place. Side mounting clamps are used with the accessory plate and can also be used with customer plates or loads. If done with care the plate can be drilled and tapped. Refer to the owner's manual for ***locations that must not be drilled or tapped***. CPV units can also be ordered with "Tap Plates" installed. These plates have a standard tap pattern on them for customer use. Alternatively a custom tap plate can be ordered plain or with taps, slots grooves etc per customer requirements. CP versions have a tap pattern as a standard and have provision for mounting to enclosures.

# General Use Cold Plate Applications

## THEME PARK EXHIBIT

**PROBLEM:** A company specializing in 3-D designs for museums, theme parks, and other attractions needed to build an "icy throne" for a museum exhibit and keep it dry at the same time.

**SOLUTION:** Using four TECA AHP-1200CP cold plates, one was placed in the seat, back, and in each arm rest of the throne. Raw aluminum was then screwed onto the plates, and the throne surfaces reached close to -20C!

Visitors to the museum can sit on the throne to feel the chill. The "ice" in the picture is not real. It is a "hard coat" of scenic ice.

The throne manufacturers did not want museum visitors to get wet from real ice; their goal was to create a throne that felt as cold as possible. They are thrilled with the results!

To see the "icy throne" in action please visit http://www.azscience.org/narnia.php web page!

## MEDICAL LABORATORY

**PROBLEM:** Department of histology in a major hospital needed a peltier cold plate to freeze tissue samples for examination.

**SOLUTION:** The Histology Division of the Department of Pathology places tissue samples from biopsies into a small block and fills it with wax. Several of these samples are then placed on one of the AHP-1200CP cold plates to "pull the heat" out of the wax so it gets really hard. The near-frozen samples are then shaved down to the desired section (slice) using a Microtome (in picture). The thin sections are then placed in the water bath to warm up the remaining wax in order to remove it and then place the section on a slide for examination.

## TELECOMMUNICATIONS

**PROBLEM:** Customer needed a cold plate that could get to -40C.

**SOLUTION:** Liquid cooled cascade peltier cold plate.

TECA does a lot of business in the field of telecommunications. This customer needs to test components in the range of minus 40C. Single stage thermoelectrics cannot reach such a low temperature, so TECA designed and built liquid cooled cascaded cold-plates for the customer's laboratory. We used as many standard components as we could, so that while the order was for only two systems, the cost could be kept to a minimum. The customer got a turn-key package including the cold-plate, fittings, cabling, DC power supply and PID temperature controller.

## COOLING OF GAS FLOW:

**PROBLEM:** To Cool and heat an aerosol flow tube. A 1 inch OD, 0.875 inch ID stainless steel flow tube mounted inside a 2-2.5 inch ID pipe.

**SOLUTION:** The requirements led to direct contact cooling as being a good solution. "We would like to have the flow tube sandwiched between the cold plates with the temperature controller and power supplies attached in a similar manner so that we only need attach the temperature controller (the TC-3400 appears as if it will work) to a computer so that we can change the set points remotely. Is any of this even possible or am I dreaming in Technicolor? Less than 3 months after the initial contact the product was shipped. Several months later a follow up was made with this response. "Things are doing really well. It does exactly what we wanted it to do, and is much more efficient and better than we hoped for. We're very happy!

## PERFORMANCE TESTING

**PROBLEM:** Need to test low-temperature performance of inertial measuring devices.

In this application of low temperature thermoelectric cooling; the user is testing inertial measurement devices over a temperature range. The devices as well as the TECA cascaded cooling assembly are subjected to various rotational and acceleration stimuli while device temperature is controlled.

**SOLUTION:** The cascaded cooler was built up from a standard Model AHP301CP cold plate.

The finished test fixture was able to function with a maximum rotation rate of 1700 degrees per second and 50g acceleration. The rotation is evident in the photo. By using a standard product as the basis for the cooling system, higher costs associated with a custom solution were avoided.

## AVIONICS

**PROBLEM:** A branch of the US military had an overheating problem with a high-tech radio inside the wing of a fighter aircraft.

**SOLUTION:** TECA custom, high-performance cold plate.

TECA developed the solution by making custom cold plates that withstand the shock, vibration, and G forces created by one of the most technically advanced aircraft. In order to assure maximum strength with minimum weight, TECA's Advanced Machining Center machines the finned heat sinks for each cooler from a single blocks of material.

# Laboratory Cold Plate Notes

## Things you need to know to start sizing a cold plate:

**Temperatures:** The ambient temperature is the air temperature around the cold plate, often the room temperature. The desired temperature can be at the cold plate or at a location on the item being cooled. This means that the cold plate might be colder than the item being cooled. The difference between the two is the design temperature differential (delta T). Make sure to use the cold plate temperature when working with the performance curves.

**Heat Loads Active and Ambient:** We define an active load as any source of heat. Waste electric heat or exothermic reactions are examples. Loads can also be related to the specific heat of a sample when cycle times are important. Ambient loads are caused by the temperature differential between the ambient and the item being cooled. An un-insulated test item will have a higher ambient load than an insulated one.

**Performance Curves:** The total load and temperature differential (delta T) can be applied to the performance curves of the cold plates to determine if the capacity is sufficient. Complete details on this process can be found on Page 10.

## Things you should consider when selecting cold plate:

**Purpose:** What is the real need for cooling: maintaining electronics temperatures, precision temperature control, maintaining sample temperatures, cooling a process, temperature cycling? Answering these questions will help in selecting the correct cold plate, control types and methods.

**Temperature Control:** Many applications simply require cooling with no fancy temperature controls. The CP style of products often best fit these needs. When better control and more control features are needed the CPV series is often the best choice . Each application should be evaluated independently to assure safe and proper control.

**Environment:** In general our standard cold plates can handle factory, lab and office environments. No standard unit is made for outdoor or washdown environments. Typical locations are bench top, under bench and installed on an enclosure. Custom versions have been made for many environments.

**Power Input:** Cold plates requiring 120 VAC, 240 VAC, 120/240 VAC, 12VDC, 24 VDC and 12/24/48 VDC are available.

**Cooling Medium:** TECA has both air cooled and liquid cooled cold plates. When using the liquid cooled versions the delta T reference temperature is the liquid temperature, when using air cooled cold plates it's the ambient air temperature. Liquid cooled cold plates require a constant flow of cooling water. This can be tap water, in house chilled water or re-circulating chillers.

**Mounting:** Secure thermally conductive mounting of the componenets to cold plate surface is needed. The CPV versions are bench top units and the standard cold plate comes with no provision for mounting. The cold plate is a smooth flat aluminum surface. Items can be thermally greased into place using DOW 340 heat transfer grease or similar. Many times the tackiness of the grease is enough to hold the test item in place. Side mounting clamps are used with the accessory plate and can also be used with customer plates or loads. If done with care the plate can be drilled and tapped. Refer to the owner's manual for ***locations that must not be drilled or tapped***. CPV units can also be ordered with "Tap Plates" installed. These plates have a standard tap pattern on them for customer use. Alternatively a custom tap plate can be ordered plain or with taps, slots grooves etc per customer requirements. CP versions have a tap pattern as a standard and have provision for mounting to enclosures.

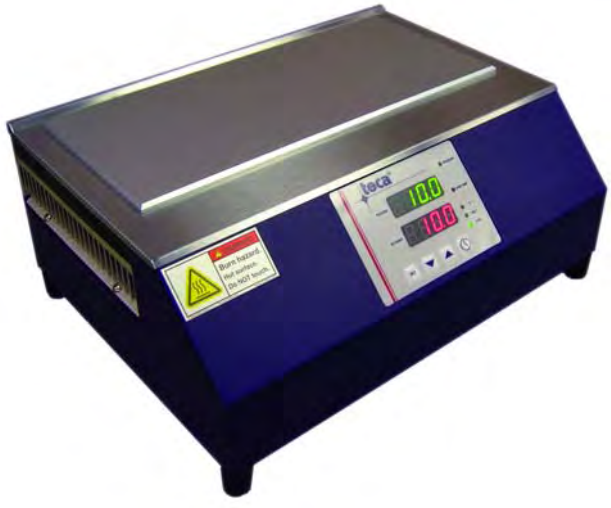

# Laboratory Cold Plate Applications

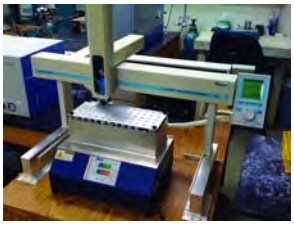

## ISOTOPE RATIO MASS SPECTROMETRY LABORATORY

**PROBLEM:** Stock thermostated sample tray supplied with mass spectrometer holds water samples at above ambient temperature. This leads to evaporation and condensation within the sample vials, and problems of gas transfer through sample needle to mass spectrometer (liquid condensation blocks gas flow through capillary tube).
**SOLUTION:** USF Geology Stable Isotope Laboratory installed a second auto-sampler with a TECA AHP-1200CPV cold plate to keep samples at below ambient temperature. This prevents condensation within the vials, and maintains the thermal stability required for isotope ratio mass spectrometry of water samples analyzed by equilibration method.

## LABORATORY

**PROBLEM:** Investigating the changes in behavioral responses due to changes in experimental floor temperature and dermal application of heating/cooling compounds in an animal model.
**SOLUTION:** The TECA AHP-1200DCP dual zone cold/hot thermoelectric plate with two independently controllable temperature zones provides precise regulation of the floor temperature and change of settings as deemed experimentally necessary. The Plexyglass arena allows careful monitoring of animal activity while allowing the animal to roam free across the experimental surface.

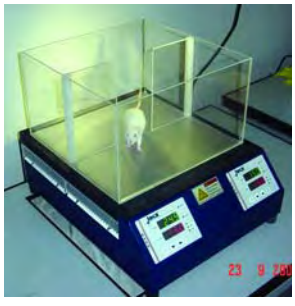

## PETROLEUM INDUSTRY RESEARCH

**PROBLEM:** To cool down and hold four one liter bottles filled with samples, to 0C.
**SOLUTION:** With its AHP1200CPV Versatile Cold Plate, Teca offers accessory Cold Well assembly with Insulation Kit as shown. The AHP1200CPV is a standard item. The Cold Well assembly is made to order. The user can specify the number of wells and the diameter of each, as long as the hole pattern fits within the footprint given.

## RESEARCH

**PROBLEM:** Keeping tissue samples frozen for dissection has been done over an ice/dry ice combination with variable results. The problem was to find a way to get reliable consistent results.
**SOLUTION:** The Dept. of Psychiatry in a major U.S. university is employing the Versatile Cold Plate Model AHP1200CPV in a novel way. They are using the product to keep tissue samples frozen for dissection. The technician has placed an accessory borosilicate (Pyrex) substrate directly on the Cold Plate to provide a cut proof, frozen work area.
The apparatus provides temperature stability and control. This in turn assures uniform tissue sample consistency for excellent quality dissection.

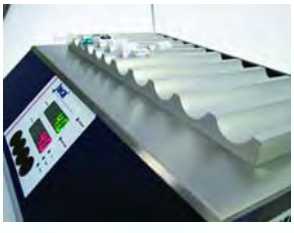

## MEDICATION STORAGE:

**PROBLEM:** Keeping medication at optimal storage temperature without use of large refrigerator.
**SOLUTION:** A customized AHP-1200CPV thermoelectric cold plate (Peltier cooling plate) with plate that has grooves with various diameters to accommodate vials of different sizes and lengths was a perfect solution for the customer.

Another feature of this custom thermoelectric cooling unit (Peltier cold plate) is tamper proof temperature controller.

## THERMAL GRADIENT BAR

**PROBLEM:** Research department of a university needed a bench top cooling/heating system that could create a thermal gradient for temperature preference study on insects.
**SOLUTION:** Many tests were run with the AHP-301CPV and the AHP-1200CPV to evaluate temperature uniformity and differential. More and more researchers are looking into the versatile CPV line of cold plates to improve their tests with the CPV line of products and accessories. Call us. Maybe we can help you too.

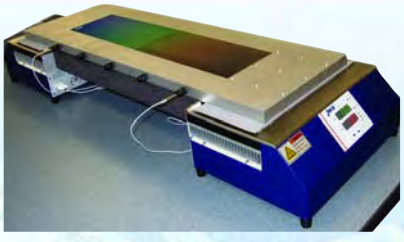

# Liquid Chiller Notes

## Things you need to know to start sizing a liquid chiller:

**Temperatures:** The ambient temperature is the air temperature around the liquid chiller. The desired temperature is the fluid temperature at the outlet or at a location at the item being cooled. The difference between the two is the design temperature differential (delta T). Typically the fluid temperature has to be a little cooler than the item being cooled. Make sure to include any gradients from the fluid to the test item. Also include any increase or decrease in the fluid due to the hoses. While these differences are typically small large hose lengths and poor thermal coupling between the fluid and the device under test can increase them.

**Heat Loads Active and Ambient:** We define an active load as any source of heat. Waste electric heat or exothermic reactions are examples. Loads can also be related to the specific heat of a sample when cycle times are important. Ambient loads are caused by the temperature differential between the ambient and the fluid in the hoses and the device under test. Un-insulated hoses and test items will have higher ambient loads than insulated one. These values are often difficult to estimate but quickly measured.

**Performance Curves:** The total load and temperature differential (delta T) can be applied to the performance curves of the liquid chillers to determine if the capacity is sufficient. Complete details on this process can be found on Page 10.

**Fluid flow requirements:** What flow rate is required? What is the pressure drop at that flow rate? Will the hoses significantly affect the pressure drop? Graphs of the flow vs. pressure drop are available for each liquid chiller.

## Things you should consider when selecting a liquid chiller:

**Purpose:** What is the real need for cooling: maintaining electronics temperatures, precision temperature control, maintaining sample temperatures, cooling a process, temperature cycling? Is this a laboratory or industrial setting? Do I need portability? Is this an OEM application where the chiller must be packaged into your product? Answering these questions will help in selecting the correct liquid for your application.

**Temperature Control:** Some applications simply require cooling with no fancy temperature controls. The TLC-1200 and the TLC Cubed products often best fit these needs. When better control and more control features are needed the TLC-700 and TLC-900 are used. The TLC-900 has a remote sensor feature standard allowing you to control the temperature at a point downstream or on the device under test. Each application should be evaluated independently to assure safe and proper control.

**Type of Fluid:** TECA recommends using distilled water. Regular tap water can be used also although "hard" water may cause mineral deposits to build up. For those applications which may go below 0 C a mixture of 25% ethylene glycol and distilled water is recommended. Algaecides are also commonly used additives. Fluids other than water must be evaluated on a case by case basis.

**Cooling Medium:** All standard TECA liquid chillers are air cooled products.

**Environment:** In general our standard liquid chillers can handle factory, lab and office environments. No standard unit is made for outdoor or wash-down environments. Typical locations are bench top, under bench and rack mount. Custom versions have been made for many environments.

**Power Input:** Liquid chillers requiring 120 VAC, 240 VAC, 120/240 VAC and 24 VDC are available.

**Connections:** Most liquid chillers have connectors, hoses, clamps and hose insulation included as part of their standard package. What sort of connection is required at the device under test? NPT tap? Hose barb? What sizes? It's best to answer these questions up front to avoid problems down the road.

# Liquid Chiller Applications

## COSMETIC TREATMENT

**PROBLEM:** Photofacial treatments using intense pulsed light are said to remove spider veins and age spots, but are uncomfortable for the patient.
**SOLUTION:** The apparatus shown uses a TECA Model TLC700 recirculating liquid chiller to cool the tip of the hand piece which rests on the skin area under treatment. This enhances the comfort of the patient; allowing for a better quality treatment. The chiller is a closed loop system so no water gets on the patient or the instruments. Water temperature is closely adjustable over a wide range.

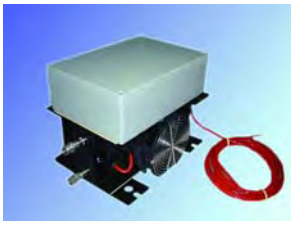

## MILITARY APPLICATION

**PROBLEM:** The United State Navy needed a liquid chiller to circulate coolant and also meet strict military requirements.
**SOLUTION:** Custom thermoelectric liquid chiller using MIL rated components.
Here's another custom military application by TECA. This is a liquid chiller for circulating chilled coolant as part of a tracking system on a NAVY ship. Note that the chilled liquid circuit is effectively "sandwiched" between two heat sinks with rugged Mil 901 fans. Wiring and electronics are housed in a NEMA4X enclosure with an O-ring gasket seal. This unit is rated for shipboard use in salt-spray, shock and vibration.

## AEROSPACE MANUFACTURING QC

**PROBLEM:** Modify a standard model chiller to meet a highly specialized requirement, including liquid cooling, 24 VDC input and wall mounting.
**SOLUTION:** This recirculating liquid chiller was developed for a customer who needed something similar to the TECA LHP-300CP chiller; but it had to be a liquid cooled liquid chiller - it had to be 24 VDC input - and it had to be mounted on the wall! The application is X-Ray inspection of aircraft engine parts. Temperature controlled water is circulated through a heat exchanger which is keeping photo diodes nice and cool, assuring quality X-Ray imaging.

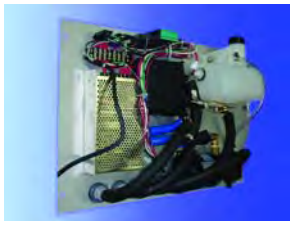

## SEMICONDUCTOR TESTING

**PROBLEM:** To control semiconductor test stage without introducing electromagnetic noise.
**SOLUTION:** Using TLC-900 recirculating liquid chiller customer was able to control semiconductor test stage where proximity of cooling device would produce electromagnetic noise. Temperature controlled fluid supplied by TLC-900 keeps test stage cooled and free of noise.

## CHILLER WITH 200' HOSE:

**PROBLEM:** Too cool a 400 watts load 200' away with a liquid chiller that could handel the pumping distance and cooling capacity.
**SOLUTION:** We could have run the numbers and come up with an estimate. It was really easier to just hook up some hose and a constant load plate, roll it into the environmental chamber and see what it did. It did more than it was supposed to. The customers safely bought it knowing it would do what he needed.

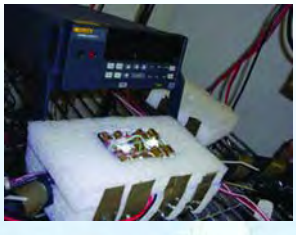

## LIQUID CHILLER COLD PLATE CASCADE:

**PROBLEM:** Cold plate capable of cooling to -40C with maximum height of 2"
**SOLUTION:** A cascade system comprised of a TLC-900 liquid chiller and a LHP-150CP. The LHP-150CP is a liquid cooled cold plate with a size of 4" X 2" X 1.63" well under the height limit of 2"and the combination of the two can cool the LHP-150CP cold plate surface to -40C.

## Understanding | Air Conditioner Ratings

### Ratings

**Thermoelectric Modules:**
Traditionally thermoelectric modules have been rated at two points under two conditions. The first point is the maximum load (Qmax) at zero degrees delta T (dT=0) and the second point is the maximum delta T (dTmax) at a no load (Q=0). The load is defined as the amount of energy removed from the cold side ceramic. The delta T is defined as the temperature difference between the cold side and hot side ceramics. Extensive curves showing the performance under other conditions are often available.

**Thermoelectric systems:**
Reputable system manufacturers rate thermoelectric systems in watts or btu/hr under zero degree delta T conditions. In this case the load is defined as the amount of energy removed from the cooling medium. For air cooled systems the delta T is the temperature difference between the cooled medium and the ambient air. The cooled medium would be a cold plate in direct contact applications, a fluid such as water in liquid chiller applications and the enclosure air return temperature in air conditioner applications.

**Air Conditioners, U.S.**
Standards have not yet been created for enclosure air conditioners in the United States. The portions of the standards which deal with ratings and test conditions can still be interpreted for enclosure air conditioners. Too complex to display here, these standards define, among other parameters, the temperature conditions under which ratings are supposed to be made. These temperatures are generally defined as the room temperature and the ambient temperature. Typically the room temperature is either below or equal to the ambient temperature.

**Air Conditioners, Europe:**
The Europeans have developed a standard, DIN 3168, which specifically addresses enclosure air conditioners or coolers for distribution boxes. This standard does contain temperature information specific to the rating of such air conditioners. The load or the "useful cooling capacity", is only the useful sensible heat flow which is taken up by the appliance for lowering the inside temperature of the distribution box. The temperature rating conditions for DIN 3168 are for the evaporator inlet (enclosure) temperature and condenser inlet to be an equal 35 C, or for the evaporator temperature to be 35 C and the condenser temperature to be 50 C, stated L35 L50.

**Performance Curves:**
The two types of performance curves used throughout the industry are shown on the following page. Both of these curves represent the performance of the **TECA** model **AHP-1200**. The top curve is shown per DIN 3168. In this curve temperatures are represented as absolutes, the x axis represents the inlet temperature at the condenser (the enclosure temperature), the vertical axis represents the useful cooling capacity, and separate load lines represent various evaporator inlet temperatures (ambient temperatures). Plotting a vertical line from the condenser inlet temperature to a specific evaporator temperature line and from that intersection horizontally, provides the useful cooling capacity. The bottom curve is for the same product represented in the traditional format. Here the temperatures are presented as differentials. Plotting a horizontal line from a desired delta T to intersect with the selected performance curve and then vertically to the x axis provides the cooling capacity under that condition. Both types of curves accurately represent the performance of a thermoelectric cooling system.

* *The rated performance value shown for a positive 20 degree F delta T condition is true. However, **TECA** does not consider a 20 degree F delta T to be a valid rating condition for an air conditioner. This value is only shown for purpose of competitive parity with those manufacturers who choose this condition for rating their products. A performance rating stated at the positive 20 degree F delta T condition is more appropriate for above ambient heat exchangers such as heat pipes or for specific applications where it should be clearly stated.*

# Ratings and Performance Curves

## Understanding | Different Performance Curves



### Performance curve per Din 3168 (AHP-1200)

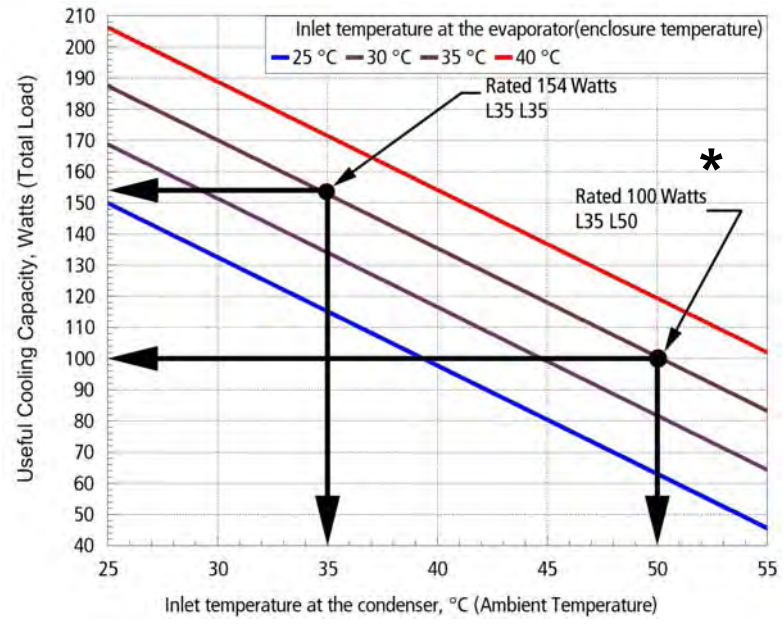


### TECA's traditional performance curve (AHP-1200)

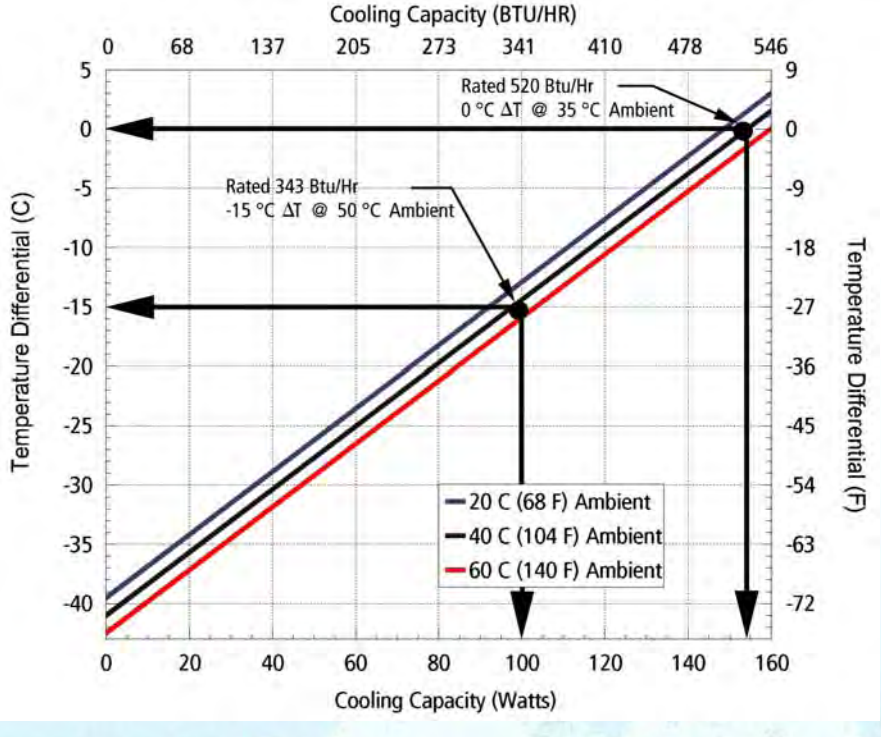

# Air Conditioners

90-1800 BTU/hr

# Air Cooled by Environment Served

## NEMA-12

**FHP-2850** page 54
1600-1800 BTU/hr rating,
120 and 240 VAC

**AHP-1800** page 18
1035-1180 BTU/hr rating,
120, 240 and 120/240 VAC

**AHP-1800 DC** page 20
1035-1180 BTU/hr rating,
24 VDC

**AHP-1501** page 26
1035-1180 BTU/hr rating,
120, 240 and 120/240 VAC

**AHP-1501 DC** page 28
1035-1180 BTU/hr rating,
24 VDC

**FHP-1501** page 56
1000-1100 BTU/hr rating,
120/240 VAC

**FHP-1501 DC** page 58
1000-1100 BTU/hr rating,
24 VDC

**AHP-1400** page 30
810-900 BTU/hr rating,
120 VAC

**AHP-1200** page 32
500-550 BTU/hr rating,
120 and 120/240 VAC

## NEMA-4

**AHP-1800XE** page 18
1035-1180 BTU/hr rating,
120, 240 VAC

**AHP-1800XE DC** page 20
1035-1180 BTU/hr rating
24 VDC

**AHP-1501XE** page 26
1000-1100 BTU/hr rating,
120/240 VAC

**AHP-1501XE DC** page 28
1000-1100 BTU/hr rating,
120/240 VAC

**FHP-1501XE** page 56
1000-1100 BTU/hr rating,
120/240 VAC

**FHP-1501XE DC** page 58
1000-1100 BTU/hr rating,
24 VDC

**AHP-1200XE** page 32
500-550 BTU/hr rating,
120 and 240 VAC

**AHP-1200XE DC** page 34
500-550 BTU/hr rating,
24 VDC

**FHP-750XE** page 60
400-450 BTU/hr rating,
120 and 240 VAC

## NEMA-4X & MIL

**AHP-1800X** page 18
1035-1180 BTU/hr rating,
120 and 120/ 240 VAC

**AHP-1800X DC** page 20
1035-1180 BTU/hr rating
24 VDC

**AHP-1200X** page 32
500-550 BTU/hr rating,
120 and 120/240 VAC

**AHP-1200X DC** page 34
500-550 BTU/hr rating,
24 VDC

## HAZARDOUS

**AHP-1800EP** page 22
1035-1180 BTU/hr rating,
120 VAC, 120/240 VAC

**AHP-1802XP** page 24
1035-1180 BTU/hr rating
240 VAC

# AIR CONDITIONERS

## Air Cooled

## 90-1800 BTU/hr

### NEMA-12

**AHP-1200 DC** page 34
500-550 BTU/hr rating,
24 VDC

**FHP-750** page 60
400-452 BTU/hr rating,
120, 240 VAC & 24 VDC

**AHP-500** page 42
303-504 BTU/hr rating,
24 VDC

**AHP-401, 400** page 44
225-360 BTU/hr rating,
120 VAC, 24 VDC

**FHP-500** page 64
250-406 BTU/hr rating,
24 VDC

**FHP-401, 400** page 66
192-315 BTU/hr rating,
120 VAC, 24 VDC

**AHP-301FF** page 48
160-200 BTU/hr rating,
120/240 VAC

**AHP-300FF** page 50
200-220 BTU/hr rating,
12, 24, and 12/24/48 VDC,

**AHP-150FF** page 52
90-105 BTU/hr rating,
12, 24, and 12/24 VDC

### NEMA-4

**FHP-750XE DC** page 62
400-450 BTU/hr rating,
24 VDC

**AHP-500XE** page 42
303-504 BTU/hr rating,
24 VDC

**AHP-400XE** page 46
225-330 BTU/hr rating,
24 VDC

**FHP-500XE** page 64
250-406 BTU/hr rating,
24 VDC

**FHP-400XE** page 68
192-282 BTU/hr rating,
24 VDC

**AHP-300XE** page 50
200-220 BTU/hr rating,
24 and 12/24/48 VDC

**AHP-150XE** page 52
90-105 BTU/hr rating,
12 VDC

### NEMA-4X

**AHP-500X** page 42
303-504 BTU/hr rating,
24 VD

**FHP-500X** page 64
250-406 BTU/hr rating,
24 VD

**AHP-400X** page 46
225-330 BTU/hr rating,
24 VD

**FHP-400X** page 68
192-282 BTU/hr rating,
24 VD

**AHP-300X** page 50
200-220 BTU/hr rating,
12, 24, and 12/24/48 VDC,

### HAZARDOUS

**AHP-1200EP** page 36
500-550 BTU/hr rating,
120 and 120/240 VAC

**AHP-1200CXP** page 38
500-550 BTU/hr rating,
120 VAC

# Air Conditioners

90-1800 BTU/hr

# Air Cooled by Style

## THROUGH MOUNTED

## AHP-SERIES

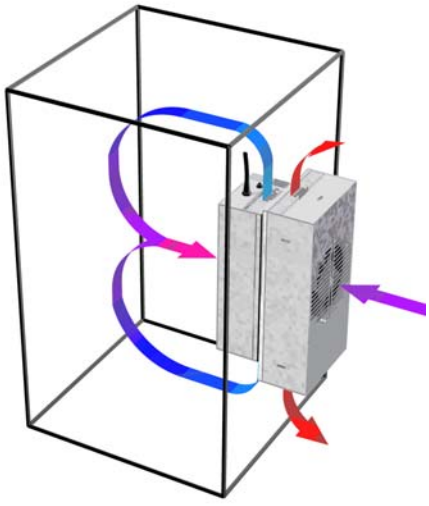

Note: Top mounting orientation is not recommended.

**AHP-1800EP** page 22
1035-1180 BTU/hr rating,
18" x 12.35" mounting area
120 and 120/240 VAC
Class I Div 2, NEMA-12, 4X, UL-1604

**AHP-1800** page 18
1035-1180 BTU/hr rating,
18" x 12.35" mounting area
120 and 120/240 VAC,
NEMA-12, NEMA4, NEMA-4X
UL-1995/CSA 22.2, CE

**AHP-1800 DC** page 20
1100-1300 BTU/hr rating,
18" x 12.3" mounting area
24 VDC
NEMA-12, NEMA-4, NEMA-4X

**AHP-1802XP** page 24
950-1100 BTU/hr rating,
24" x 12.3" mounting area
240 VAC, IP 54, Zone 1, Zone 2
Ex II 2 G; T1-T3

**AHP-1501** page 26
1000-1100 BTU/hr rating,
15.2" x 12" mounting area
120/240 VAC, NEMA-12,
NEMA-4, UL-1995/CSA 22.2, CE

**AHP-1501 DC** page 28
1000-1100 BTU/hr rating,
15.2" x 12" mounting area
24 VDC
NEMA-12, NEMA-4

**AHP-1400** page 30
810-900 BTU/hr rating,
12" x 12" mounting area
120 VAC, NEMA-12

**AHP-1200EP** page 36
500-550 BTU/hr rating,
15" x 7.3" mounting area
120 and 120/240 VAC,
Class I Div 2, NEMA-12, 4X
UL-1604

**AHP-1200** page 32
500-550 BTU/hr rating,
15" x 7.35" mounting area
120 VAC, 120/240 VAC, 240 VAC
NEMA-12, NEMA-4, NEMA-4X,
UL-995/CSA22.2, CE

**AHP-1200 DC** page 34
15" x 7.35" mounting area
24 VDC
NEMA-12, NEMA-4/4X

## FLUSH MOUNTED

## FHP-SERIES

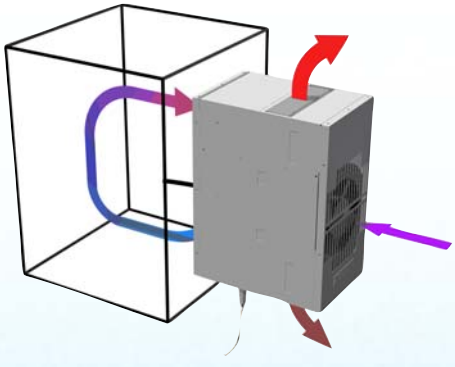

Note: Top mounting orientation is not recommended.

**FHP-2850** page 54
1600-1800 BTU/hr rating,
12" x 24" mounting area
120 and 240 VAC, NEMA-12

**FHP-1501** page 56
1000-1100 BTU/hr rating,
15.2" x 12" mounting area
120/240 VAC
NEMA-12, NEMA-4
UL-1995/CSA 22.2, CE

**FHP-1501 DC** page 58
1000-1100 BTU/hr rating,
15.2" x 12" mounting area
24 VDC
NEMA-12, NEMA-4

**FHP-750** page 60
400-450 BTU/hr rating,
12" x 6" mounting area
120 and 240 VAC
UL-1995/CSA 22.2, CE
NEMA-12, NEMA-4

TEAM TECA
CUSTOM
ENGINEERING
Call us at 888-TECA-USA.
We're here to help!

# AIR CONDITIONERS

## Air Cooled

## 90-1800 BTU/hr

### THRU MOUNT

**AHP-1200CXP (N. AM)** page 38
307-680 BTU/hr rating,
15" x 7.35" mounting area
120 VAC for systems requiring
NEMA-4X, Class I, Div 1

**AHP-1200CXP (European)** page 40
307-680 BTU/hr rating
15" x 7.35" mounting area
120 VAC; for systems requing IP56,
Group II, Catagory 2

**AHP-500** page 42
303-504 BTU/hr rating,
24 VDC
NEMA-12, NEMA-4, 4X

**AHP-401** page 44
350-440 BTU/hr rating,
120 VAC
NEMA-12

**AHP-400** page 46
225-330 BTU/hr rating,
24 VDC
NEMA-12, NEMA-4, 4X

**AHP-301FF** page 48
160-200 BTU/hr rating,
10 " x 5.52" mounting area
120/240 VAC, NEMA-12

**AHP-300X** page 50
200-220 BTU/hr rating,
10" x 5.37" mounting area
12, 24, and 12/24/48 VDC
NEMA-4X

**AHP-300XE** page 50
200-220 BTU/hr rating,
10" x 5.37" mounting area
24, and 12/24/48 VDC
NEMA-4

**AHP-300FF** page 50
200-220 BTU/hr rating,
10" x 5.37" mounting area
12, 24, and 12/24/48 VDC,
NEMA-12

**AHP-150FF** page 52
90-105 BTU/hr rating,
7" x 5" mounting area
12, 24, and 12/24 VDC
NEMA-12

**AHP-150XE** page 52
90-105 BTU/hr rating,
7" x 5" mounting area
12 VDC
NEMA-4

### FLUSH MOUNT

**FHP-750 DC** page 62
400-450 BTU/hr rating,
12" x 6" mounting area
24 VDC
NEMA-12, NEMA-4

**FHP-500** page 64
252-406 BTU/hr rating,
24 VDC
NEMA-12, 4, 4X

**FHP-401** page 66
315-360 BTU/hr rating,
120 VAC
NEMA-12

**FHP-400** page 68
192-282 BTU/hr rating,
12, 24, and 12/24 VDC
NEMA-12, 4, 4X

# AHP-1800 Air Conditioner

Air Cooled
Thru Mount
NEMA-12, 4, 4X

120 VAC, 240 VAC Input

## FEATURES

- Compact, (18" L X 12.35" W X 9.69"D)
- Excels in high ambient temperatures
- Environmentally Safe
- Dual voltage versions available, consult factory.
- No compressor, fluorocarbons or filters
- Virtually maintenance-free operation
- Stainless steel exterior housing
- Versions to withstand corrosive environments, shock and vibration
- Mounts and operates in any orientation

## INCLUDES

- Adjustable temperature control
- Mounting gasket and hardware
- Power input line cord

## OPTIONS

- Other temperature settings for single set point controls
- Custom finishes

EN 60335-1
EN60335-2-40

## SPECIFICATIONS

| | MODEL | PART NUMBER | PERFORMANCE RATING BTU/HR | VOLTAGE VAC 50/60 HZ | CURRENT AMPS. | WEIGHT LBS.(KG) | TEMP. CONTROL | OPERATING AMBIENT TEMPERATURE RANGE °C | OPERATING ENCLOSURE TEMPERATURE RANGE °C | AGENCY APPROVALS |
|---|---|---|---|---|---|---|---|---|---|---|
| NEMA 12 | AHP-1800 | 0-0180-0-000 | 1035-1180 | 120 | 8.0 | 46(21) | TC-6F | -40/+65 | -10/+60 | UL1995/CSA22.2 |
| | AHP-1800 | 0-0150-0-000 | 1035-1180 | 120 | 8.0 | 46(21) | EXT* | -40/+65 | -10/+60 | UL1995/CSA22.2 |
| | AHP-1800 | 0-01F0-0-000 | 1035-1180 | 120 | 8.0 | 46(21) | 85°F (30°C) | -40/+65 | -10/+60 | UL1995/CSA22.2 |
| | AHP-1800HC | 0-0130-1-000 | 1035-1180 | 120 | 8.0 | 46(21) | TC-3F | -40/+65 | -10/+60 | UL1995/CSA22.2 |
| | AHP-1800HC | 0-0150-1-000 | 1035-1180 | 120 | 8.0 | 46(21) | EXT* | -40/+65 | -10/+60 | UL1995/CSA22.2 |
| | AHP-1802 | 0-0182-0-000 | 1035-1180 | 240 | 5.0 | 46(21) | TC-6F† | -40/+65 | -10/+60 | UL1995/CSA22.2 |
| | AHP-1802 | 0-0152-0-000 | 1035-1180 | 240 | 5.0 | 46(21) | EXT* | -40/+65 | -10/+60 | UL1995/CSA22.2 |
| | AHP-1802 | 0-01F2-0-000 | 1035-1180 | 240 | 5.0 | 46(21) | 85°F (30°C) | -40/+65 | -10/+60 | UL1995/CSA22.2 |
| | AHP-1802HC | 0-0132-1-000 | 1035-1180 | 240 | 5.0 | 46(21) | TC-3F | -40/+65 | -10/+60 | UL1995/CSA22.2 |
| | AHP-1802HC | 0-0152-1-000 | 1035-1180 | 240 | 5.0 | 46(21) | EXT* | -40/+65 | -10/+60 | UL1995/CSA22.2 |
| | AHP-1801 | 0-0181-0-000 | 1035-1180 | 120/240 | 8.0/5.0 | 46(21) | TC-6F† | -40/+65 | -10/+60 | UL1995/CSA22.2 |
| | AHP-1801 | 0-01F1-0-000 | 1035-1180 | 120/240 | 8.0/5.0 | 46(21) | 85°F (30°C) | -40/+65 | -10/+60 | UL1995/CSA22.2 |
| | AHP-1801HC | 0-0131-1-000 | 1035-1180 | 120/240 | 8.0/5.0 | 46(21) | TC-3F | -40/+65 | -10/+60 | UL1995/CSA22.2 |
| NEMA 4 | AHP-1800XE | 0-0180-4-000 | 1035-1180 | 120 | 8.0 | 47(21.4) | TC-6F | -40/+65 | -10/+60 | UL1995/CSA22.2 |
| | AHP-1800XE | 0-0150-4-000 | 1035-1180 | 120 | 8.0 | 47(21.4) | EXT* | -40/+65 | -10/+60 | UL1995/CSA22.2 |
| | AHP-1800XE | 0-01F0-4-000 | 1035-1180 | 120 | 8.0 | 47(21.4) | 85°F (30°C) | -40/+65 | -10/+60 | UL1995/CSA22.2 |
| | AHP-1800XEHC | 0-0130-5-000 | 1035-1180 | 120 | 8.0 | 47(21.4) | TC-3F | -40/+65 | -10/+60 | UL1995/CSA22.2 |
| | AHP-1800XEHC | 0-0150-5-000 | 1035-1180 | 120 | 8.0 | 47(21.4) | EXT* | -40/+65 | -10/+60 | UL1995/CSA22.2 |
| | AHP-1802XE | 0-0182-4-000 | 1035-1180 | 240 | 5.0 | 52(23.6) | TC-6F† | -40/+65 | -10/+60 | UL1995/CSA22.2 |
| | AHP-1802XE | 0-0152-4-000 | 1035-1180 | 240 | 5.0 | 52(23.6) | EXT* | -40/+65 | -10/+60 | UL1995/CSA22.2 |
| | AHP-1802XE | 0-01F2-4-000 | 1035-1180 | 240 | 5.0 | 52(23.6) | 85°F (30°C) | -40/+65 | -10/+60 | UL1995/CSA22.2 |
| | AHP-1802XEHC | 0-0132-5-000 | 1035-1180 | 240 | 5.0 | 52(23.6) | TC-3F | -40/+65 | -10/+60 | UL1995/CSA22.2 |
| | AHP-1802XEHC | 0-0152-5-000 | 1035-1180 | 240 | 5.0 | 52(23.6) | EXT* | -40/+65 | -10/+60 | UL1995/CSA22.2 |
| NEMA 4X | AHP-1800X | 0-0180-2-000 | 1035-1180 | 120 | 8.0 | 47(21.4) | TC-6F | -40/+65 | -10/+60 | UL1995/CSA22.2 |
| | AHP-1800X | 0-0150-2-000 | 1035-1180 | 120 | 8.0 | 47(21.4) | EXT* | -40/+65 | -10/+60 | UL1995/CSA22.2 |
| | AHP-1800X | 0-01F0-2-000 | 1035-1180 | 120 | 8.0 | 47(21.4) | 85°F (30°C) | -40/+65 | -10/+60 | UL1995/CSA22.2 |
| | AHP-1800XHC | 0-0130-3-000 | 1035-1180 | 120 | 8.0 | 47(21.4) | TC-3F | -40/+65 | -10/+60 | UL1995/CSA22.2 |
| | AHP-1800XHC | 0-0150-3-000 | 1035-1180 | 120 | 8.0 | 47(21.4) | EXT* | -40/+65 | -10/+60 | UL1995/CSA22.2 |
| | AHP-1801X | 0-0181-2-000 | 1035-1180 | 120/240 | 8.0/6.0 | 47(21.4) | TC-6F† | -40/+65 | -10/+60 | UL1995/CSA22.2 |
| | AHP-1801X | 0-01F1-2-000 | 1035-1180 | 120/240 | 8.0/6.0 | 47(21.4) | 85°F (30°C) | -40/+65 | -10/+60 | UL1995/CSA22.2 |
| | AHP-1801XHC | 0-0131-3-000 | 1035-1180 | 120/240 | 8.0/6.0 | 47(21.4) | TC-3F | -40/+65 | -10/+60 | UL1995/CSA22.2 |

* Unit is set for 5-32 VDC external signal, relay(s) included
† Unit evaluated by ETL

Consult factory for shock and vibration models

# AHP-1800

## PERFORMANCE CURVE

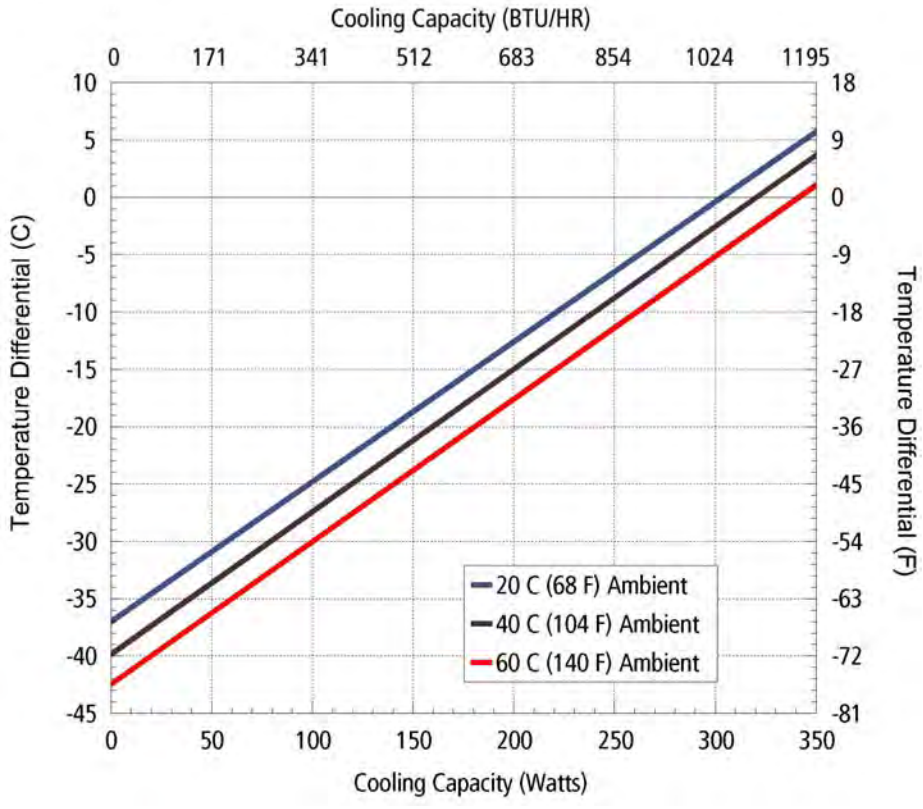


| Equation of line: y=ΔT(°C) x=Capacity (Watts) | | | |
|---|---|---|---|
| **Ambient Temp** | **20°C** | **40°C** | **60°C** |
| Enclosure Air | y=.122x-37.0 | y=.122x-39.7 | y=.122x-42.3 |
| Cold Sink | y=.09x-37.0 | y=.09x-39.7 | y=.09x-42.3 |

**MOUNTING STYLE**

Thru Mount

**ENVIRONMENTS SERVED**

NEMA-12 IP 52

NEMA-4,4X IP 56

**RATING (TRADITIONAL)**

1100 BTU/hr @ 0 °F ΔT

1420 BTU/hr @ +20 °F ΔT *

**RATING (DIN 3168)**

322 Watts L35 L35

210 Watts L35 L50

* See page 10

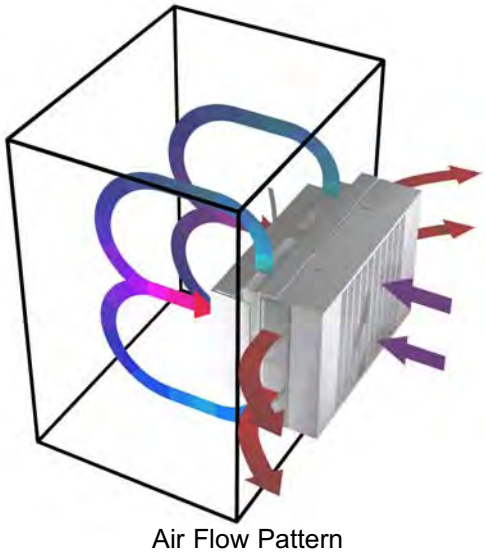

Air Flow Pattern

## DIMENSIONS

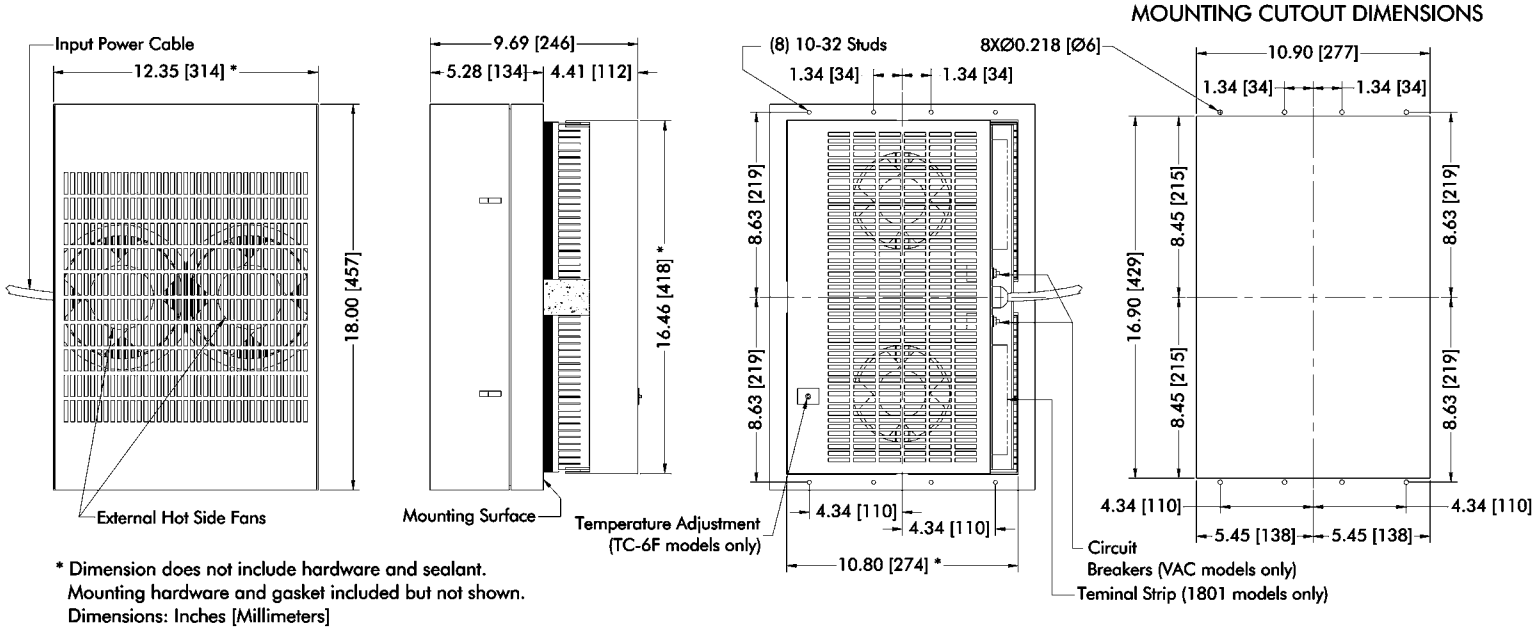


* Dimension does not include hardware and sealant.
Mounting hardware and gasket included but not shown.
Dimensions: Inches [Millimeters]

# AHP-1800 | Air Conditioner

Air Cooled
Thru Mount
NEMA-12, 4, 4X

24 VDC Input

## FEATURES

- Compact, (18" L X 12.35" W X 9.69"D)
- Excels in high ambient temperatures
- Environmentally Safe
- Dual efficiency versions available, consult factory
- No compressor, fluorocarbons or filters
- Virtually maintenance-free operation
- Stainless steel exterior housing
- Versions to withstand corrosive environments, shock and vibration
- Mounts and operates in any orientation

## INCLUDES

- Adjustable temperature control
- Mounting gasket and hardware
- Power input leads

## OPTIONS

- 250 VDC configuration for crane applications available
- Other voltage configurations available (contact TECA)
- Other temperature settings for single set point controls
- Custom finishes

## SPECIFICATIONS

| | MODEL | PART NUMBER | NOTES | COP @ 0 °C ΔT L35 L35 | VOLTAGE VDC | RUNING CURRENT AMPS. | WEIGHT LBS.(KG) APPROX. | TEMP. CONTROL | OPERATING AMBIENT TEMPERATURE RANGE °C | OPERATING ENCLOSURE TEMPERATURE RANGE °C |
|---|---|---|---|---|---|---|---|---|---|---|
| NEMA 12 | AHP-1800 | 0-0195-0-000 | Cool only | 0.745 | 24 (16-28) | 18 | 40 (18) | None | -40/+70 | -20/+70 |
| | AHP-1800 | 0-0185-0-000 | Cool only | 0.745 | 24 (16-28) | 18 | 40 (18) | TC-6F | -40/+70 | -20/+70 |
| | AHP-1800 | 0-01F5-0-000 | Cool only | 0.745 | 24 (16-28) | 18 | 40 (18) | 85°F (30°C) | -40/+70 | -20/+70 |
| | AHP-1800 | 0-0155-0-000 | Cool only | 0.745 | 24 (16-28) | 18 | 40 (18) | EXT* | -40/+70 | -20/+70 |
| | AHP-1800HC | 0-0135-1-000 | Heat/Cool | 0.745 | 24 (16-28) | 18 | 40 (18) | TC-3F | -40/+70 | -20/+70 |
| | AHP-1800HC | 0-01I5-1-000 | Heat/Cool | 0.745 | 24 (16-28) | 18 | 40 (18) | TC-7F | -40/+70 | -20/+70 |
| | AHP-1800HC | 0-0155-1-000 | Heat/Cool | 0.745 | 24 (16-28) | 18 | 40 (18) | EXT† | -40/+70 | -20/+70 |
| | AHP-1800HC | 0-01H5-1-000 | Heat/Cool | 0.745 | 24 (16-28) | 18 | 40 (18) | TC-4600 | -40/+70 | -20/+70 |
| NEMA 4 | AHP-1800XE | 0-0195-4-000 | Cool only | 0.745 | 24 (16-28) | 18 | 40 (18) | NONE | -40/+70 | -20/+70 |
| | AHP-1800XE | 0-0185-4-000 | Cool only | 0.745 | 24 (16-28) | 18 | 40 (18) | TC-6F | -40/+70 | -20/+70 |
| | AHP-1800XE | 0-01F5-4-000 | Cool only | 0.745 | 24 (16-28) | 18 | 40 (18) | 85°F (30°C) | -40/+70 | -20/+70 |
| | AHP-1800XE | 0-0155-4-000 | Cool only | 0.745 | 24 (16-28) | 18 | 40 (18) | EXT* | -40/+70 | -20/+70 |
| | AHP-1800XEHC | 0-0135-5-000 | Heat/Cool | 0.745 | 24 (16-28) | 18 | 40 (18) | TC-3F | -40/+70 | -20/+70 |
| | AHP-1800XEHC | 0-01I5-5-000 | Heat/Cool | 0.745 | 24 (16-28) | 18 | 40 (18) | TC-7F | -40/+70 | -20/+70 |
| | AHP-1800XEHC | 0-0155-5-000 | Heat/Cool | 0.745 | 24 (16-28) | 18 | 40 (18) | EXT† | -40/+70 | -20/+70 |
| | AHP-1800XEHC | 0-01H5-5-000 | Heat/Cool | 0.745 | 24 (16-28) | 18 | 40 (18) | 4600 | -40/+70 | -20/+70 |
| NEMA 4X | AHP-1800X | 0-0195-2-000 | Cool only | 0.745 | 24 (16-28) | 18 | 40 (18) | NONE | -40/+70 | -20/+70 |
| | AHP-1800X | 0-0185-2-000 | Cool only | 0.745 | 24 (16-28) | 18 | 40 (18) | TC-6F | -40/+70 | -20/+70 |
| | AHP-1800X | 0-01F5-2-000 | Cool only | 0.745 | 24 (16-28) | 18 | 40 (18) | 85°F (30°C) | -40/+70 | -20/+70 |
| | AHP-1800X | 0-0155-2-000 | Cool only | 0.745 | 24 (16-28) | 18 | 40 (18) | EXT* | -40/+70 | -20/+70 |
| | AHP-1800XHC | 0-0135-3-000 | Heat/Cool | 0.745 | 24 (16-28) | 18 | 40 (18) | TC-3F | -40/+70 | -20/+70 |
| | AHP-1800XHC | 0-01I5-3-000 | Heat/Cool | 0.745 | 24 (16-28) | 18 | 40 (18) | TC-7F | -40/+70 | -20/+70 |
| | AHP-1800XHC | 0-0155-3-000 | Heat/Cool | 0.745 | 24 (16-28) | 18 | 40 (18) | EXT† | -40/+70 | -20/+70 |
| | AHP-1800XHC | 0-01H5-3-000 | Heat/Cool | 0.745 | 24 (16-28) | 18 | 40 (18) | 4600 | -40/+70 | -20/+70 |

***** Unit is set for 5-32 VDC external signal, relay(s) included

† Unit is set for 5-32 VDC external signal, H-Bridge quad pack relay(s) included

Consult factory for shock and vibration models

# AHP-1800

## PERFORMANCE CURVE

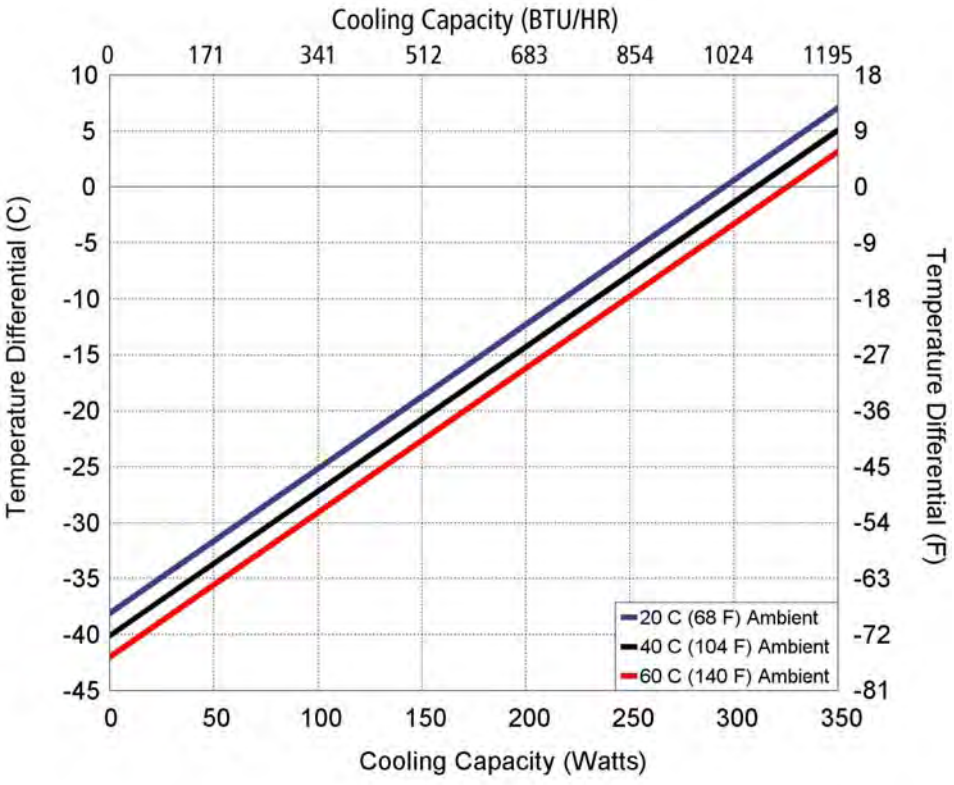


| Equation of line: y=ΔT(°C) x=Capacity (Watts) | | | |
|---|---|---|---|
| **Ambient Temp** | **20°C** | **40°C** | **60°C** |
| Enclosure Air | y=.129x-38.1 | y=.129x-40.1 | y=.129x-42.0 |
| Cold Sink | y=.09x-38.1 | y=.09x-40.1 | y=.09x-42.0 |

**MOUNTING STYLE**

Thru Mount

**ENVIRONMENTS SERVED**

NEMA-12 IP 52

NEMA-4,4X IP 56

**RATING (TRADITIONAL)**

1100 BTU/hr @ 0 °F ΔT

1420 BTU/hr @ +20 °F ΔT *

**RATING (DIN 3168)**

322 Watts L35 L35

210 Watts L35 L50

* See page 10

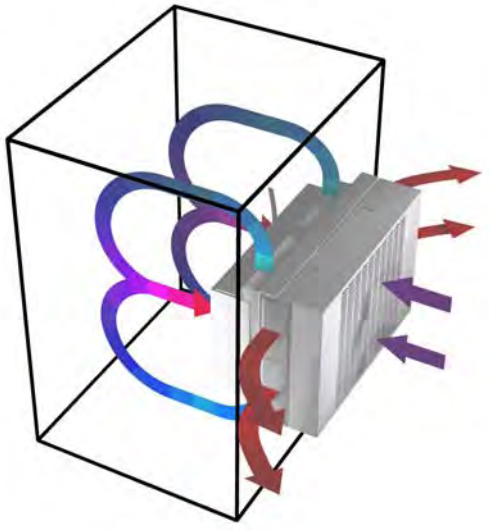

Air Flow Pattern

## DIMENSIONS

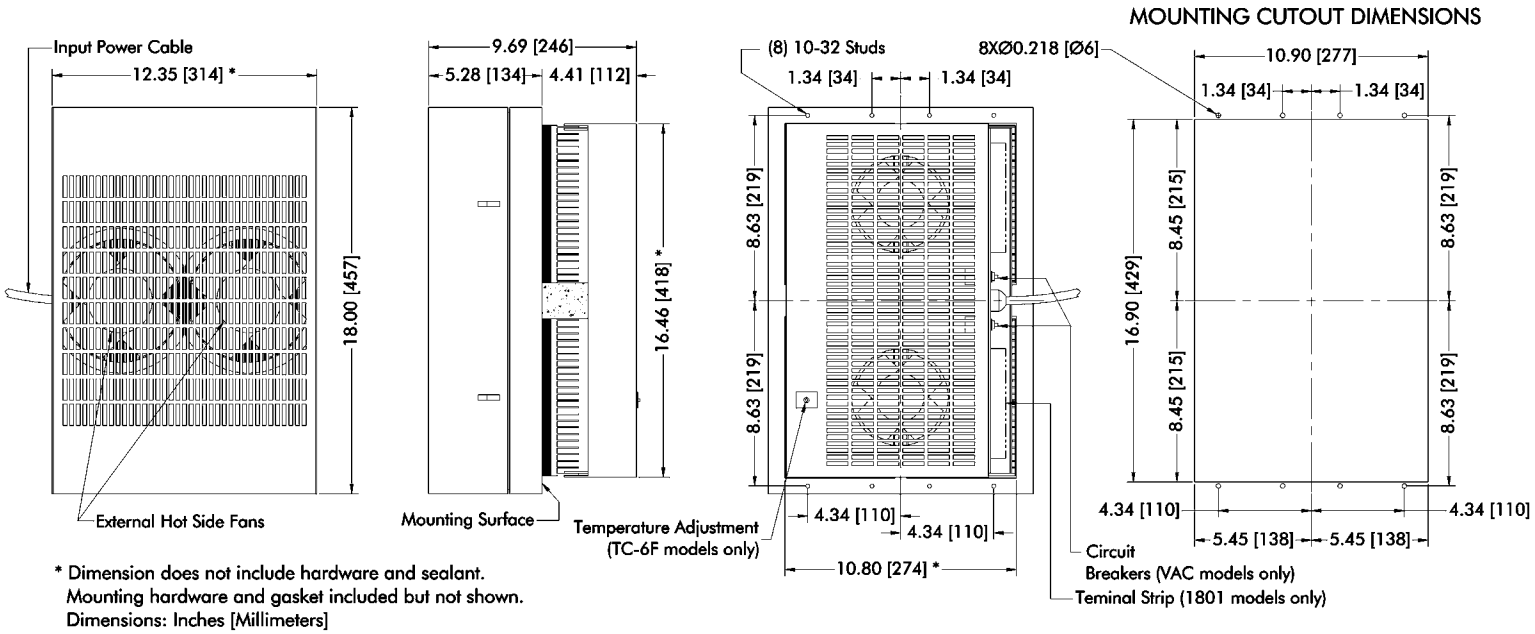


* Dimension does not include hardware and sealant.
Mounting hardware and gasket included but not shown.
Dimensions: Inches [Millimeters]

# AHP-1800EP | Air Conditioner

Air Cooled
Thru Mount
NEMA-12, 4X, Class I Div 2

120 VAC, 240 VAC Input
Hazardous Locations

## FEATURES

- Compact, (18" L X 12.35" W X 9.69"D)
- Excels in high ambient temperatures
- Environmentally Safe
- Dual voltage versions available, consult factory.
- No compressor, fluorocarbons or filters
- Virtually maintenance-free operation
- Stainless steel exterior housing
- Versions to withstand corrosive environments, shock and vibration
- Mounts and operates in any orientation
- Groups A, B, C, D

## INCLUDES

- Adjustable temperature control
- Mounting gasket and hardware
- Power input line cord

## OPTIONS

- Other temperature settings for single set point controls

## SPECIFICATIONS

| | MODEL | PART NUMBER | PERFORMANCE RATING BTU/HR | VOLTAGE VAC 50/60 HZ | CURRENT AMPS. | WEIGHT LBS.(KG) | TEMP. CONTROL | OPERATING AMBIENT TEMPERATURE RANGE °C | OPERATING ENCLOSURE TEMPERATURE RANGE °C | AGENCY APPROVALS |
|---|---|---|---|---|---|---|---|---|---|---|
| NEMA 12 CID 2 | AHP-1800EP | 0-0180-0-002 | 1035-1180 | 120 | 8.0 | 46(21) | TC-6F | -40/+63 | -10/+60 | UL1604/UL1995/CSA22.2 |
| | AHP-1800EP | 0-01F0-0-002 | 1035-1180 | 120 | 8.0 | 46(21) | 85°F (30°C) | -40/+63 | -10/+60 | UL1604/UL1995/CSA22.2 |
| | AHP-1800EP-1 | 0-0170-0-004 | 1035-1180 | 120 | 8.0 | 46(21) | EXT* | -40/+63 | -10/+60 | UL1604/UL1995/CSA22.2 |
| | AHP-1800EPHC | 0-0130-1-003 | 1035-1180 | 120 | 8.0 | 46(21) | TC-3F | -40/+63 | -10/+60 | UL1604/UL1995/CSA22.2 |
| | AHP-1800EPHC-1 | 0-0170-1-006 | 1035-1180 | 120 | 8.0 | 46(21) | EXT* | -40/+63 | -10/+60 | UL1604/UL1995/CSA22.2 |
| | AHP-1801EP | 0-0181-0-002 | 1035-1180 | 120/240 | 8.0/5.0 | 46(21) | TC-6F | -40/+63 | -10/+60 | UL1604/UL1995/CSA22.2 |
| | AHP-1801EP | 0-01F1-0-002 | 1035-1180 | 120/240 | 8.0/5.0 | 46(21) | 85°F (30°C) | -40/+63 | -10/+60 | UL1604/UL1995/CSA22.2 |
| | AHP-1801EP-1 | 0-0171-0-002 | 1035-1180 | 120/240 | 8.0/5.0 | 46(21) | EXT* | -40/+63 | -10/+60 | UL1604/UL1995/CSA22.2 |
| | AHP-1801EPHC | 0-0131-1-003 | 1035-1180 | 120/240 | 8.0/5.0 | 46(21) | TC-3F | -40/+63 | -10/+60 | UL1604/UL1995/CSA22.2 |
| | AHP-1801EPHC-1 | 0-0131-1-006 | 1035-1180 | 120/240 | 8.0/5.0 | 46(21) | EXT* | -40/+63 | -10/+60 | UL1604/UL1995/CSA22.2 |
| NEMA 4X CID 2 | AHP-1800XP | 0-0180-2-002 | 1035-1180 | 120 | 8.0 | 47(21.4) | TC-6F | -40/+75 | -10/+60 | UL1604/UL1995/CSA22.2 |
| | AHP-1800XP | 0-01F0-2-002 | 1035-1180 | 120 | 8.0 | 47(21.4) | 85°F (30°C) | -40/+75 | -10/+60 | UL1604/UL1995/CSA22.2 |
| | AHP-1800XP-1 | 0-0170-2-004 | 1035-1180 | 120 | 8.0 | 47(21.4) | EXT* | -40/+75 | -10/+60 | UL1604/UL1995/CSA22.2 |
| | AHP-1800XPHC | 0-0130-3-003 | 1035-1180 | 120 | 8.0 | 47(21.4) | TC-3F | -40/+75 | -10/+60 | UL1604/UL1995/CSA22.2 |
| | AHP-1800XPHC-1 | 0-0170-3-006 | 1035-1180 | 120 | 8.0 | 47(21.4) | EXT* | -40/+75 | -10/+60 | UL1604/UL1995/CSA22.2 |
| | AHP-1801XP | 0-0181-2-002 | 1035-1180 | 120/240 | 8.0/5.0 | 47(21.4) | TC-6F | -40/+75 | -10/+60 | UL1604/UL1995/CSA22.2 |
| | AHP-1801XP | 0-01F1-2-002 | 1035-1180 | 120/240 | 8.0/5.0 | 47(21.4) | 85°F (30°C) | -40/+75 | -10/+60 | UL1604/UL1995/CSA22.2 |
| | AHP-1801XP-1 | 0-0171-2-005 | 1035-1180 | 120/240 | 8.0/5.0 | 47(21.4) | EXT* | -40/+75 | -10/+60 | UL1604/UL1995/CSA22.2 |
| | AHP-1801XPHC | 0-0131-3-003 | 1035-1180 | 120/240 | 8.0/5.0 | 47(21.4) | TC-3F | -40/+75 | -10/+60 | UL1604/UL1995/CSA22.2 |
| | AHP-1801XPHC-1 | 0-0171-3-004 | 1035-1180 | 120/240 | 8.0/5.0 | 47(21.4) | EXT* | -40/+75 | -10/+60 | UL1604/UL1995/CSA22.2 |

* Unit is set for 5-32 VDC external signal, relay(s) included

Consult factory for shock and vibration models

# AHP-1800EP

## PERFORMANCE CURVE

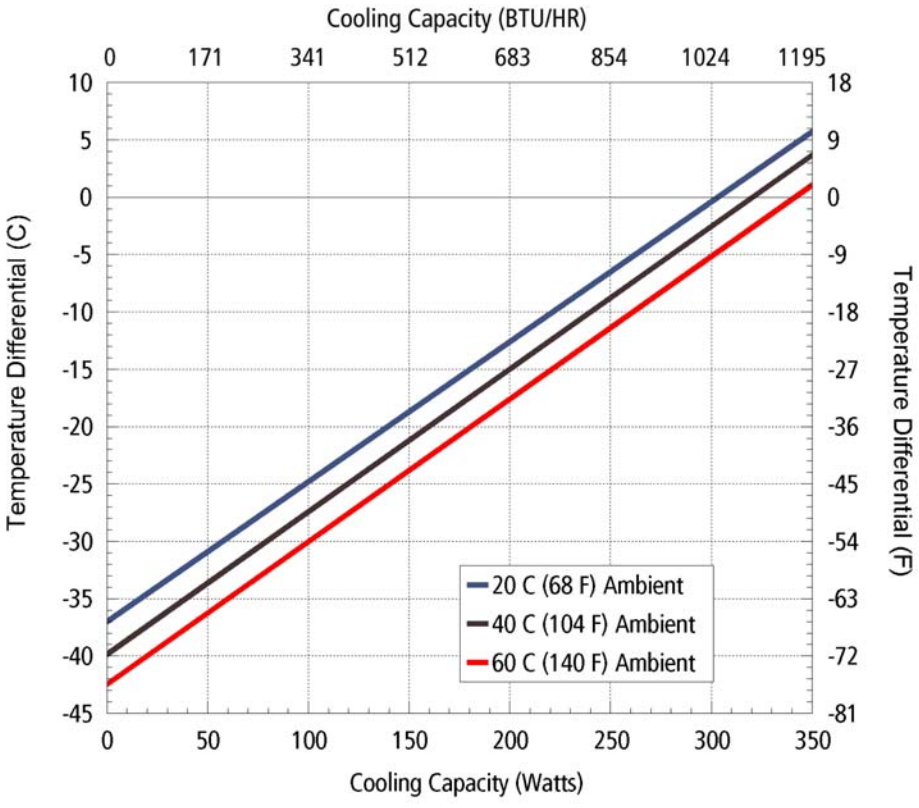


| Equation of line: y=ΔT(°C) x=Capacity (Watts) | | | |
|---|---|---|---|
| **Ambient Temp** | **20°C** | **40°C** | **60°C** |
| Enclosure Air | y=.122x-37.0 | y=.122x-39.7 | y=.122x-42.3 |
| Cold Sink | y=.09x-37.0 | y=.09x-39.7 | y=.09x-42.3 |

**MOUNTING STYLE**

Thru Mount

**ENVIRONMENTS SERVED**

Class I Div 2 NEMA-12 IP 52

Class I Div 2 NEMA-4X IP 56

**RATING (TRADITIONAL)**

1100 BTU/hr @ 0 °F ΔT

1420 BTU/hr @ +20 °F ΔT *

**RATING (DIN 3168)**

322 Watts L35 L35

210 Watts L35 L50

* See page 10

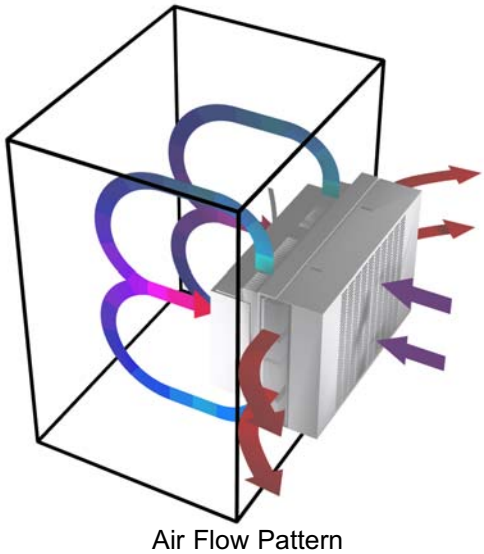

Air Flow Pattern

## DIMENSIONS

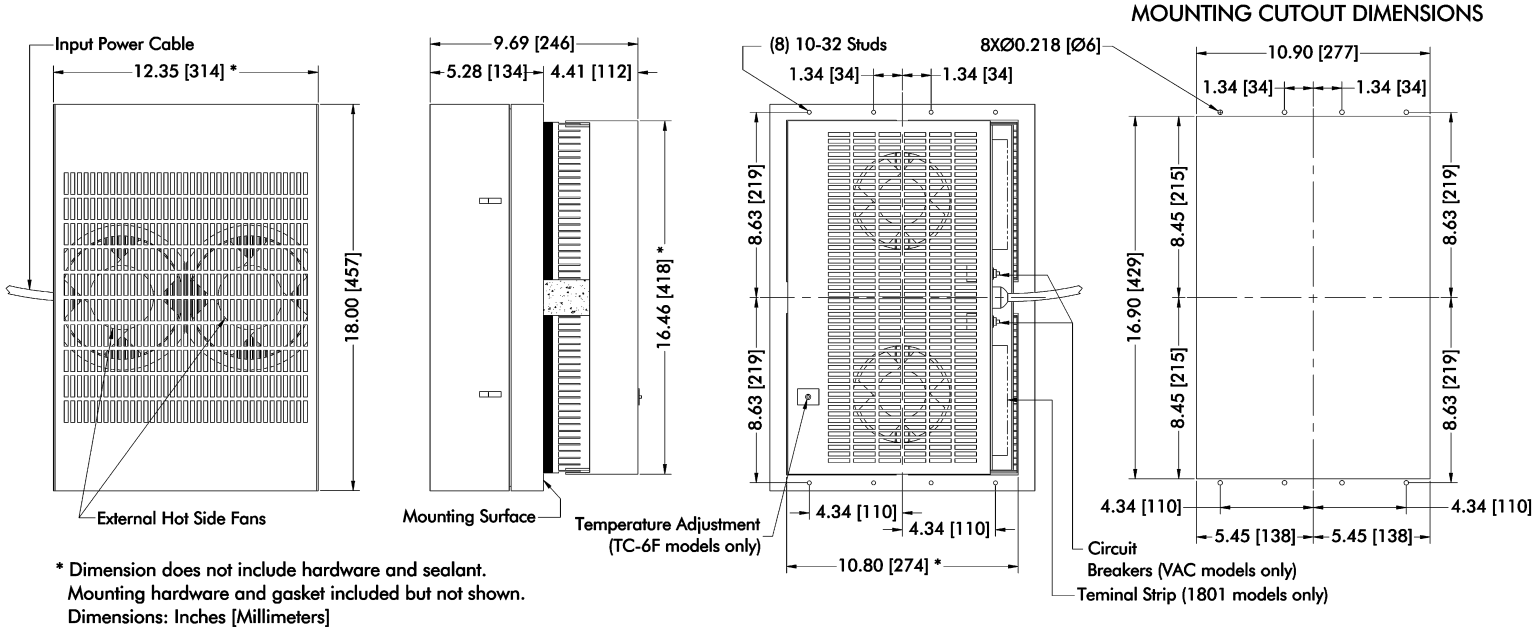


* Dimension does not include hardware and sealant.
Mounting hardware and gasket included but not shown.
Dimensions: Inches [Millimeters]

# AHP-1802XP

## European

Air Cooled
Thru Mount

# Hazardous Location Air Conditioner

## FEATURES

- Designed for European Zone 1 and Zone 2
- Compact (24" L X 12.35" W X 19.9" D)
- Weighs approximately 100 lbs. (45 kg)
- Heavy gauge aluminum and stainless steel construction
- Ambient temperature up to +50°C
- No compressor, fluorocarbons or filters
- Virtually maintenance-free operation
- Integral power supply
- Environmentally safe
- Mounts and operates in any orientation

## INCLUDES

- Semi-Centrifugal duct fan, DN 220, AC, explosion proof, zones 1and 2
- Integral linear power supply
- TC-6F adjustable cool only controller
- TC-3F Heat/Cool controller available
- Versions for customer supplied control
- Gasket and mounting hardware included
- Power input line cord

## SPECIFICATIONS

| MODEL | PART NUMBER | NOTES | PERFORMANCE RATING (BTU/HR) | VOLTAGE (VAC) 50 Hz | CURRENT AMPS. | WEIGHT LBS.(KG) | TEMP. CONTROL | MAX. OPERATING AMBIENT (°C) | APPROVALS |
|---|---|---|---|---|---|---|---|---|---|
| AHP-1802XP | 0-0182-2-007 | Cool only | 950-1100 | 240 | 5.3 | 98 (44) | TC-6F | 50 °C | pending |
| AHP-1802XPHC | 0-0132-3-008 | Heat/Cool | 950-1100 | 240 | 5.3 | 98 (44) | TC-3F | 50 °C | pending |
| AHP-1802XP | 0-0172-3-009 | Cool only | 950-1100 | 240 | 5.3 | 98 (44) | EXT* | 50 °C | pending |
| AHP-1802XPHC | 0-0172-3-010 | Heat/Cool | 950-1100 | 240 | 5.3 | 98 (44) | EXT* | 50 °C | pending |

* Unit is controlled by a separate 5-32 VDC external signal, relay(s) included

# AHP-1802XP

## PERFORMANCE CURVE

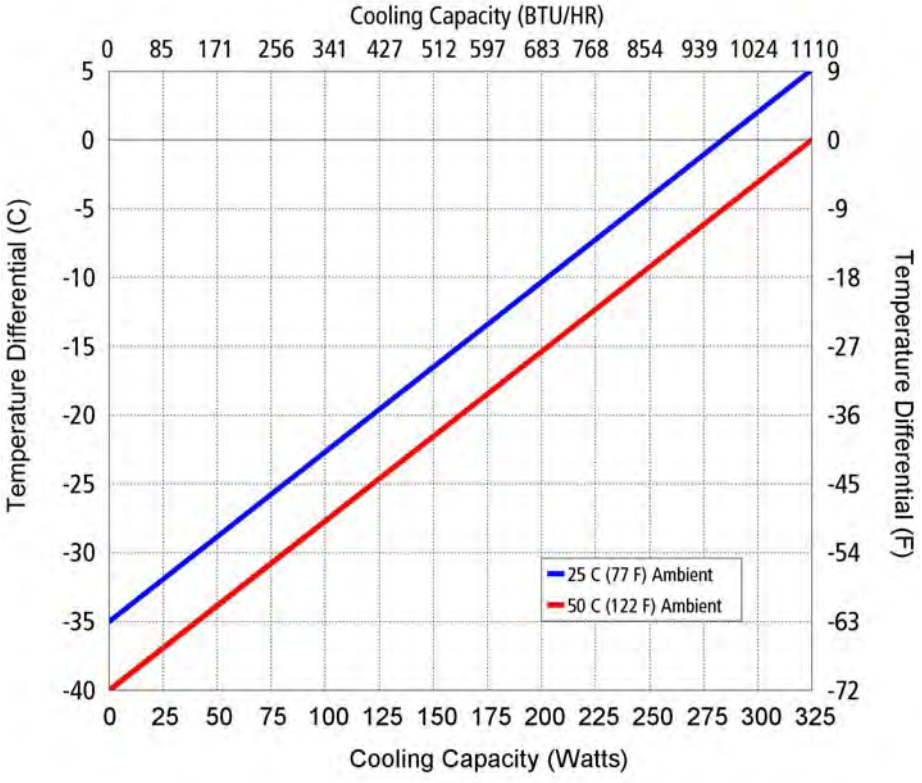


| Equation of line: y=ΔT(°C) x=Capacity (Watts) | | |
|---|---|---|
| **Ambient Temp** | **25°C** | **50°C** |
| Enclosure Air | y=.123x-35.0 | y=.123x-40.0 |
| Cold Sink | y=.09x-35.0 | y=.09x-40.0 |

### MOUNTING STYLE

Thru Mount

### ENVIRONMENTS SERVED

IP54

Zone 1, Zone 2 (pending)

Ex II 2 G

T1 - T3

### RATING (TRADITIONAL)

940 BTU/hr @ 0 °F ΔT

1210 BTU/hr @ +20 °F ΔT

### RATING (DIN 3168)

280 Watts L35 L35

160 Watts L35 L50

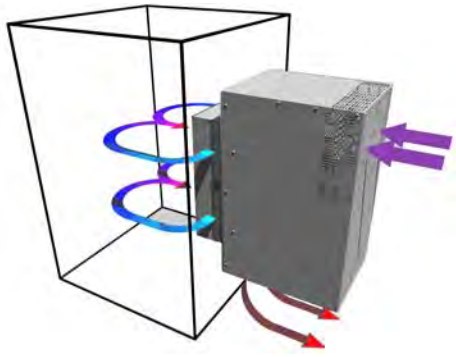

Air Flow Pattern

## DIMENSIONS

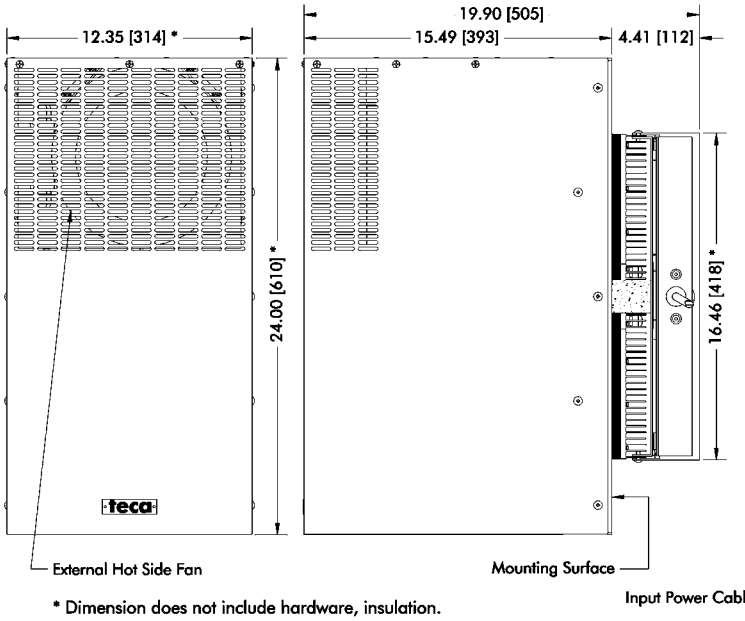


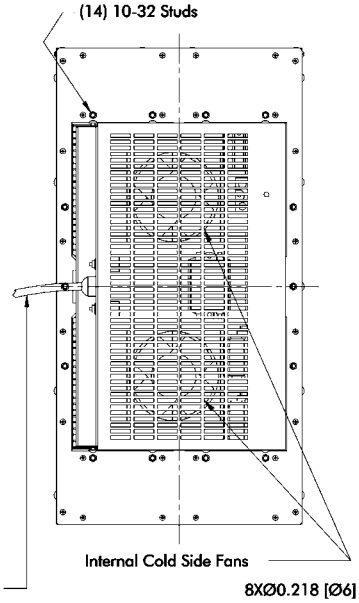


MOUNTING CUTOUT DIMENSIONS

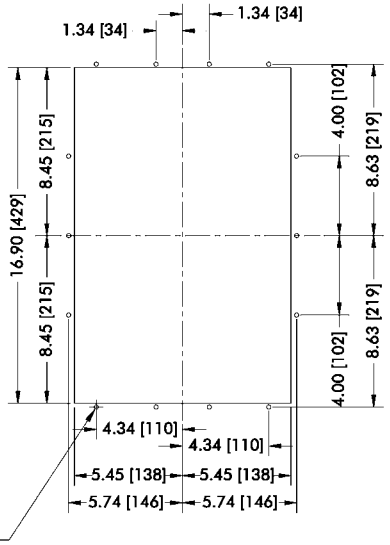


* Dimension does not include hardware, insulation.
Mounting hardware and gasket included but not shown
Dimensions: Inches [Millimeters]

# AHP-1501 Air Conditioner

Air Cooled
Thru Mount
NEMA-12 & NEMA-4

120/240 VAC Input

## FEATURES

- Compact
- Mounts in multi-unit array for incremental capacity
- Weighs only 52 LBS. (24 KG.)
- Dual voltage 120/240 VAC
- Environmentally safe
- No compressor, fluorocarbons or filters
- Virtually maintenance-free operation
- Stainless steel exterior housing

## INCLUDES

- Temperature control
- Mounting gasket and hardware
- Power input line cord
- Condensate removal system

## OPTIONS

- Other temperature settings for single set point controls
- Custom finishes

EN 60335-1
EN60335-2-40

## SPECIFICATIONS

| | MODEL | PART NUMBER | PERFORMANCE RATING BTU/HR | VOLTAGE VAC 50/60HZ | CURRENT AMPS. | TEMP. CONTROL | OPERATING AMBIENT TEMPERATURE RANGE °C | OPERATING ENCLOSURE TEMPERATURE RANGE °C | CONDENSATE REMOVAL | AGENCY APPROVALS |
|---|---|---|---|---|---|---|---|---|---|---|
| NEMA 12 | AHP-1501 | 0-2171-0-000 | 1000-1100 | 120/240 | 8.0/5.0 | 30 °C | -40/+65 | -10/+60 | Wick,Drip Pan | UL1995/CSA22.2 |
| | AHP-1501 | 0-2181-0-000 | 1000-1100 | 120/240 | 8.0/5.0 | TC-6F† | -40/+65 | -10/+60 | Wick | UL1995/CSA22.2 |
| | AHP-1501 | 0-21F1-0-000 | 1000-1100 | 120/240 | 8.0/5.0 | 85°F (30°C) | -40/+65 | -10/+60 | Wick | UL1995/CSA22.2 |
| | AHP-1501 | 0-2151-0-000 | 1000-1100 | 120/240 | 8.0/5.0 | EXT* | -40/+65 | -10/+60 | Wick | UL1995/CSA22.2 |
| | AHP-1501HC | 0-2131-1-000 | 1000-1100 | 120/240 | 8.0/5.0 | TC-3F | -40/+65 | -10/+60 | Wick | UL1995/CSA22.2 |
| | AHP-1501HC | 0-2151-1-000 | 1000-1100 | 120/240 | 8.0/5.0 | EXT* | -40/+65 | -10/+60 | Wick | UL1995/CSA22.2 |
| NEMA 4 | AHP-1501XE | 0-2181-4-000 | 1000-1100 | 120/240 | 8.0/5.0 | TC-6F† | -40/+65 | -10/+60 | Wick | UL1995/CSA22.2 |
| | AHP-1501XE | 0-21F1-4-000 | 1000-1100 | 120/240 | 8.0/5.0 | 85°F (30°C) | -40/+65 | -10/+60 | Wick | UL1995/CSA22.2 |
| | AHP-1501XE | 0-2151-4-000 | 1000-1100 | 120/240 | 8.0/5.0 | EXT* | -40/+65 | -10/+60 | Wick | UL1995/CSA22.2 |
| | AHP-1501XEHC | 0-2131-5-000 | 1000-1100 | 120/240 | 8.0/5.0 | TC-3F | -40/+65 | -10/+60 | Wick | UL1995/CSA22.2 |
| | AHP-1501XEHC | 0-2151-5-000 | 1000-1100 | 120/240 | 8.0/5.0 | EXT* | -40/+65 | -10/+60 | Wick | UL1995/CSA22.2 |

* Unit is set for 5-32 VDC external signal, relay(s) included
† Unit ealuated by ETL

# AHP-1501

## PERFORMANCE CURVE

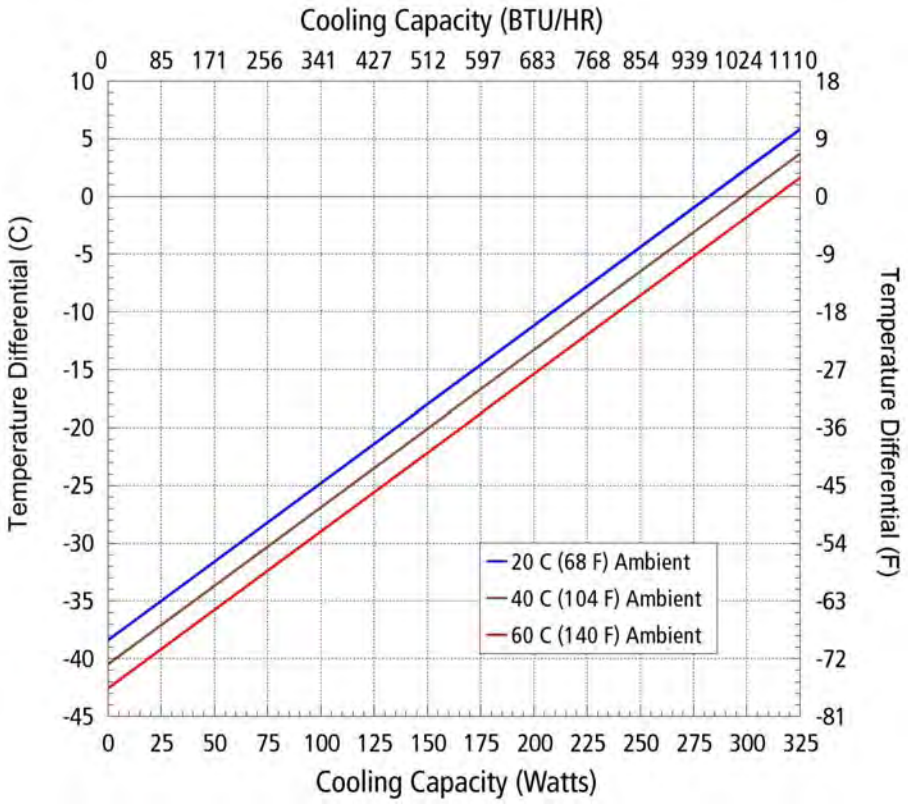


| Equation of line: y=ΔT(°C) x=Capacity (Watts) | | | |
|---|---|---|---|
| **Ambient Temp** | **20°C** | **40°C** | **60°C** |
| Enclosure Air | y=.136x-38.4 | y=.136x-40.5 | y=.136x-42.6 |
| Cold Sink | y=.10x-38.4 | y=.10x-40.5 | y=.10x-42.6 |

**MOUNTING STYLE**

Thru Mount

**ENVIRONMENTS SERVED**

NEMA-12 IP 52

NEMA-4 IP 56

**RATING (TRADITIONAL)**

1000 BTU/hr @ 0 °F ΔT

1300 BTU/hr @ +20 °F ΔT *

**RATING (DIN 3168)**

300 Watts L35 L35

187 Watts L35 L50

* See page 10

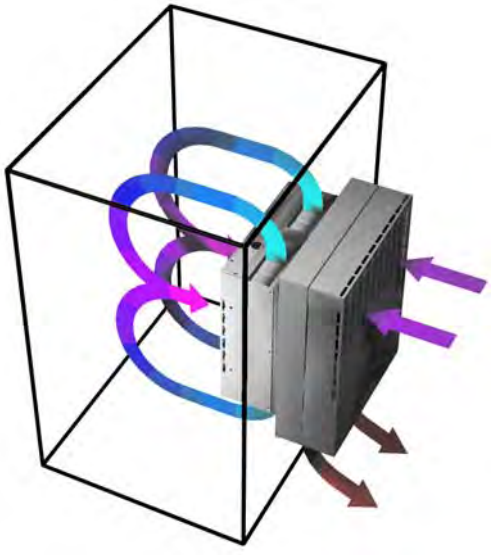

Air Flow Pattern

## AHP-1501 DIMENSIONS

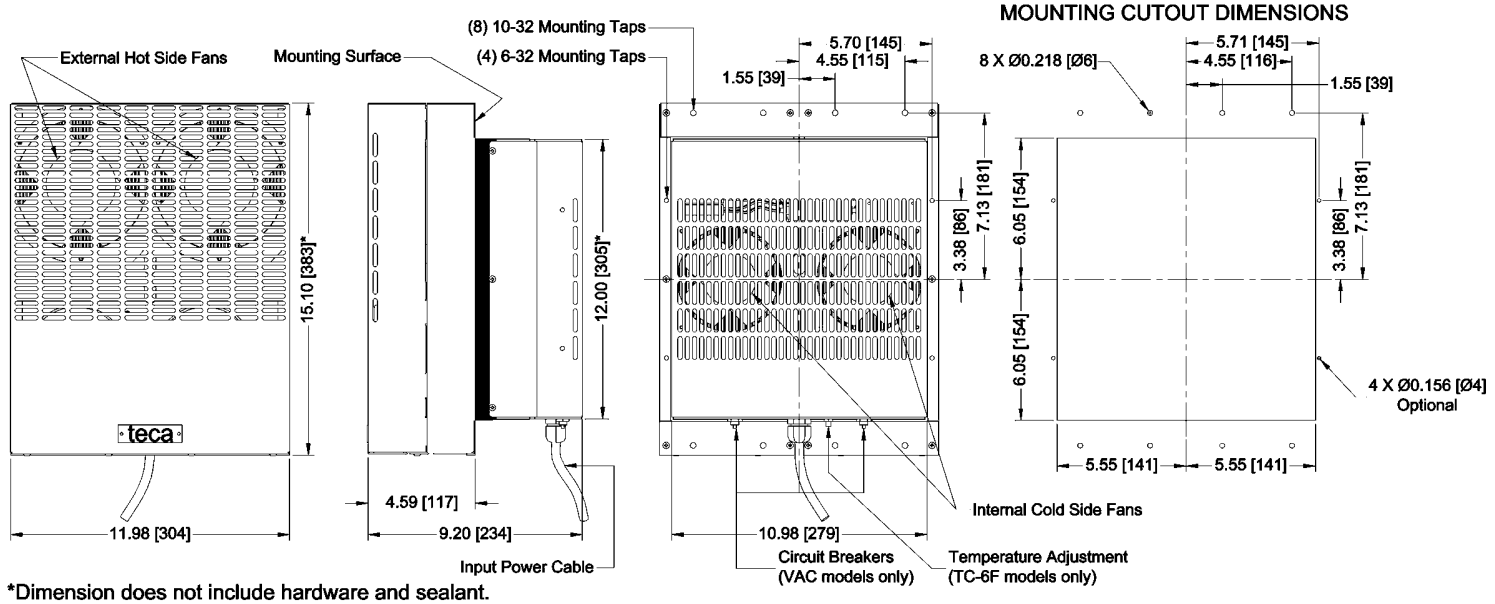


*Dimension does not include hardware and sealant.
Mounting hardware, drip pan and gasket included but not shown.
Dimensions: Inches [Millimeters]

# AHP-1501 Air Conditioner

Air Cooled
Thru Mount
NEMA-12 & NEMA-4

24 VDC Input

## FEATURES

- Compact
- Mounts in multi-unit array for incremental capacity
- Weighs only 48 LBS. (22 KG.)
- Dual efficiency versions available, consult factory
- Environmentally safe
- No compressor, fluorocarbons or filters
- Virtually maintenance-free operation
- Stainless steel exterior housing

## INCLUDES

- Temperature control
- Mounting gasket and hardware
- Power input leads
- Condensate removal system

## OPTIONS

- 250 VDC configuration for crane applications available
- Other voltage configuration available (contact TECA)
- Other temperature settings for single set point control
- Custom finishes

## SPECIFICATIONS

| | MODEL | PART NUMBER | COP @ 0 °C ΔT L35 L35 | VOLTAGE VDC | CURRENT AMPS. | WEIGHT LBS.(KG) | TEMP. CONTROL | CONDENSATE REMOVAL | OPERATING AMBIENT TEMPERATURE RANGE °C | OPERATING ENCLOSURE TEMPERATURE RANGE °C |
|---|---|---|---|---|---|---|---|---|---|---|
| NEMA 12 | AHP-1501 | 0-2185-0-000 | 0.67 | 24 (16-28) | 18 | 48(22) | TC-6F | Wick | -40/+70 | -20/+70 |
| | AHP-1501 | 0-21F5-0-000 | 0.67 | 24 (16-28) | 18 | 48(22) | 85°F (30°C) | Wick | -40/+70 | -20/+70 |
| | AHP-1501 | 0-2155-0-000 | 0.67 | 24 (16-28) | 18 | 48(22) | EXT* | Wick | -40/+70 | -20/+70 |
| | AHP-1501HC | 0-2135-1-000 | 0.67 | 24 (16-28) | 18 | 48(22) | TC-3F | Wick | -40/+70 | -20/+70 |
| | AHP-1501HC | 0-21I5-1-000 | 0.67 | 24 (16-28) | 18 | 48(22) | TC-7F | Wick | -40/+70 | -20/+70 |
| | AHP-1501HC | 0-2155-1-000 | 0.67 | 24 (16-28) | 18 | 48(22) | EXT* | Wick | -40/+70 | -20/+70 |
| | AHP-1501HC | 0-21H5-1-000 | 0.67 | 24 (16-28) | 18 | 48(22) | TC-4600 | Wick | -40/+70 | -20/+70 |
| NEMA 4 | AHP-1501XE | 0-2185-4-000 | 0.67 | 24 (16-28) | 18 | 48(22) | TC-6F | Wick | -40/+70 | -20/+70 |
| | AHP-1501XE | 0-21F5-4-000 | 0.67 | 24 (16-28) | 18 | 48(22) | 85°F (30°C) | Wick | -40/+70 | -20/+70 |
| | AHP-1501XE | 0-2155-4-000 | 0.67 | 24 (16-28) | 18 | 48(22) | EXT* | Wick | -40/+70 | -20/+70 |
| | AHP-1501XEHC | 0-2135-5-000 | 0.67 | 24 (16-28) | 18 | 48(22) | TC-3F | Wick | -40/+70 | -20/+70 |
| | AHP-1501XEHC | 0-21I5-5-000 | 0.67 | 24 (16-28) | 18 | 48(22) | TC-7F | Wick | -40/+70 | -20/+70 |
| | AHP-1501XEHC | 0-2155-5-000 | 0.67 | 24 (16-28) | 18 | 48(22) | EXT* | Wick | -40/+70 | -20/+70 |
| | AHP-1501XEHC | 0-21H5-5-000 | 0.67 | 24 (16-28) | 18 | 48(22) | 4600 | Wick | -40/+70 | -20/+70 |

* Unit is set for 5-32 VDC external signal, H-Bridge quad pack relay(s) included

# AHP-1501

## PERFORMANCE CURVE

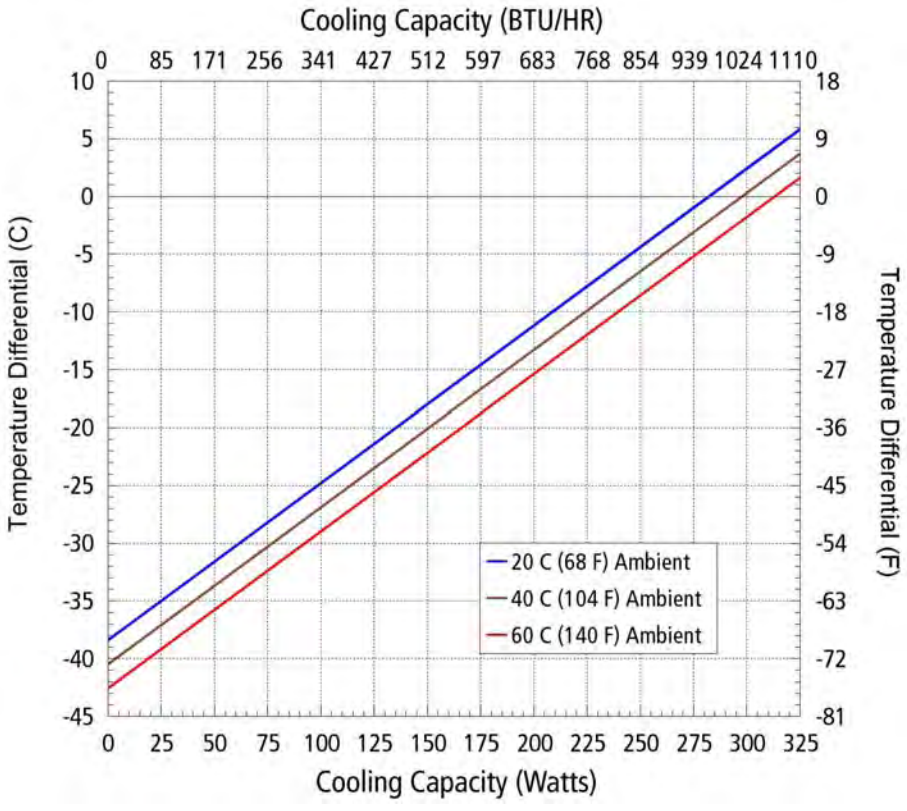


| Equation of line: y=ΔT(°C) x=Capacity (Watts) | | | |
|---|---|---|---|
| **Ambient Temp** | **20°C** | **40°C** | **60°C** |
| Enclosure Air | y=.136x-38.4 | y=.136x-40.5 | y=.136x-42.6 |
| Cold Sink | y=.10x-38.4 | y=.10x-40.5 | y=.10x-42.6 |

**MOUNTING STYLE**

Thru Mount

**ENVIRONMENTS SERVED**

NEMA-12 IP 52

NEMA-4 IP 56

**RATING (TRADITIONAL)**

1000 BTU/hr @ 0 °F ΔT

1300 BTU/hr @ +20 °F ΔT *

**RATING (DIN 3168)**

300 Watts L35 L35

187 Watts L35 L50

* See page 10

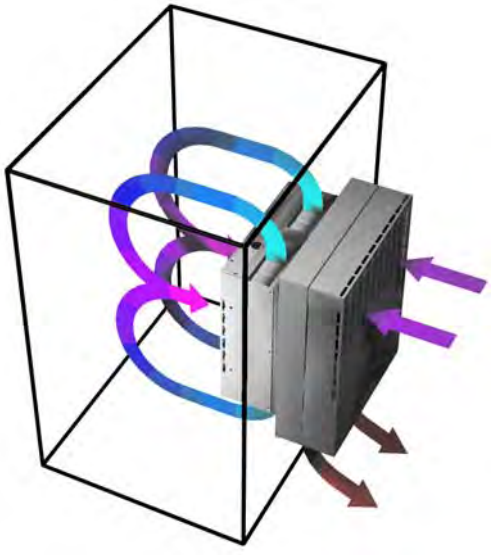

Air Flow Pattern

## AHP-1501 DIMENSIONS

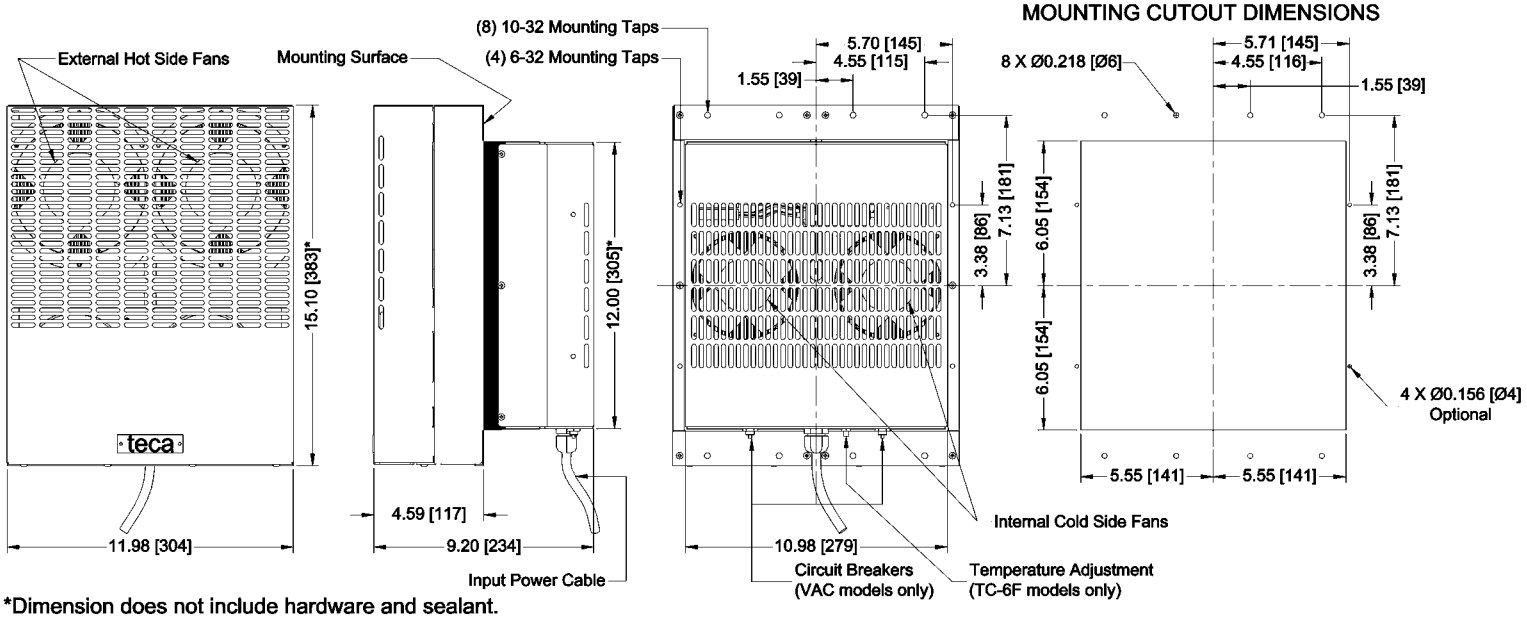


*Dimension does not include hardware and sealant.
Mounting hardware, drip pan and gasket included but not shown.
Dimensions: Inches [Millimeters]

# AHP-1400 | Air Conditioner

Air Cooled
Thru Mount
NEMA-12

120 VAC Input

## FEATURES

- Compact
- Excels in high ambient temperatures
- Environmentally safe
- No compressor, fluorocarbons or filters
- Virtually maintenance-free operation
- Stainless steel exterior housing
- NEMA-12 rating maintained
- Mounts in any orientation

## INCLUDES

- Integral power supply (120 VAC input)
- Condensate removal system
- TC-6F temperature controller

## OPTIONS

- Custom finishes

## SPECIFICATIONS

| MODEL | PART NUMBER | NOTES | PERFORMANCE RATING (BTU/HR) | VOLTAGE (VAC) 50/60 (Hz) | CURRENT AMPS. | WEIGHT LBS. (Kg) | TEMP. CONTROL | CONDENSATE REMOVAL | OPERATING AMBIENT TEMPERATURE RANGE °C | OPERATING ENCLOSURE TEMPERATURE RANGE °C |
|---|---|---|---|---|---|---|---|---|---|---|
| AHP-1400 | 0-B480-0-000 | Cool only | 810-900 | 120 | 8.5 | 33 (15) | TC-6F | Included | -40/+70 | -10/+60 |

# AHP-1400

**MOUNTING STYLE**

Thru Mount

**ENVIRONMENTS SERVED**

NEMA-12 IP 52

**RATING (TRADITIONAL)**

850 BTU/hr @ 0 °F ΔT

1090 BTU/hr @ +20 °F ΔT *

**RATING (DIN 3168)**

250 Watts L35 L35

155 Watts L35 L50

* See page 10

## PERFORMANCE CURVE

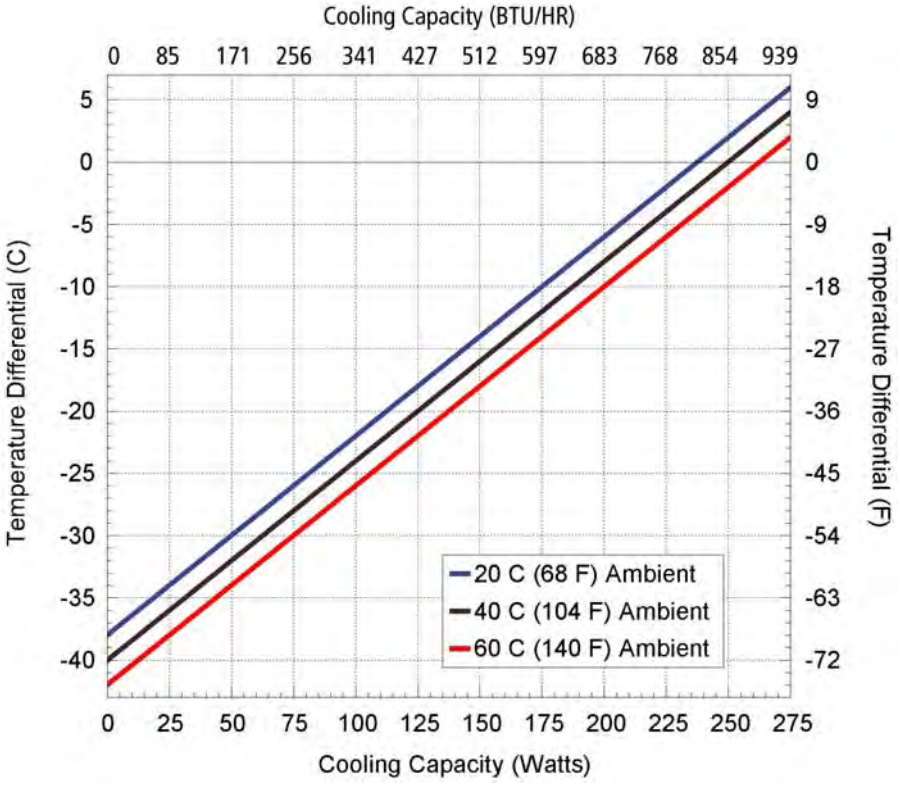


| Equation of Line: y=ΔT(°C) x=Capacity (Watts) | | | |
|---|---|---|---|
| **Ambient Temp** | **20°C** | **40°C** | **60°C** |
| Enclosure Air | y=.16x-38 | y=.16x-40 | y=.16x-42 |
| Cold Sink | y=.12x-38 | y=.12x-40 | y=.12x-42 |

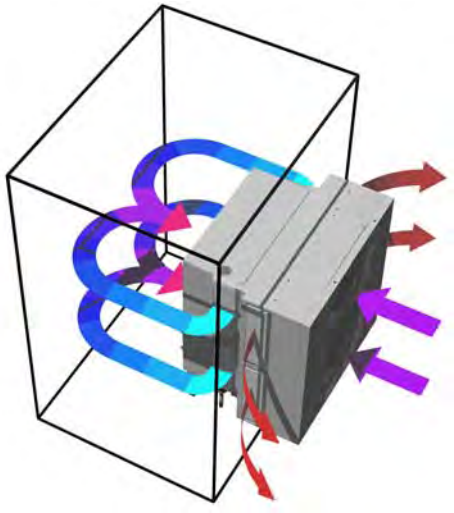

Air Flow Pattern

## DIMENSIONS

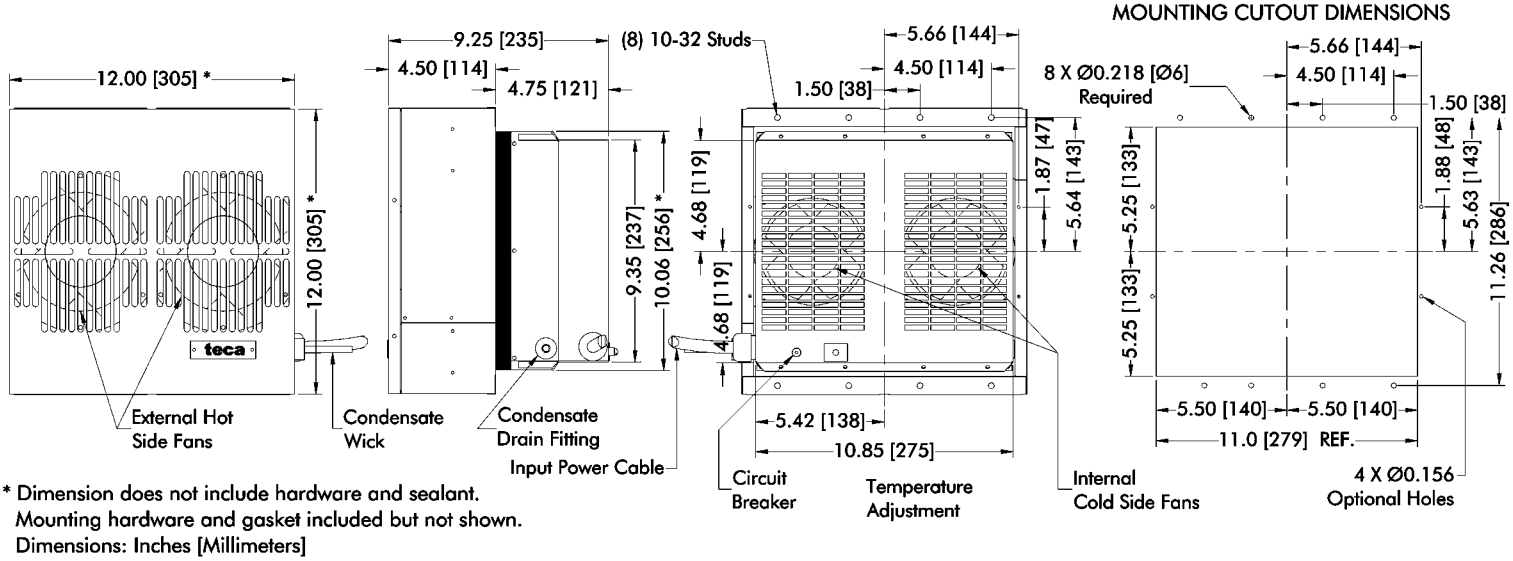


* Dimension does not include hardware and sealant.
Mounting hardware and gasket included but not shown.
Dimensions: Inches [Millimeters]

# AHP-1200 Air Conditioner

Air Cooled
Thru Mount
NEMA-12, 4,4X

120 VAC, 240 VAC Input

## FEATURES

- Compact, (only 15"L X 7.35"W X 8.17"D)
- Weighs only 21 lbs. (9.5 kg)
- Excels in high ambient temperatures
- Environmentally safe
- Dual voltage versions available
- No compressor, fluorocarbons or filters
- Virtually maintenance-free operation
- Stainless steel exterior housing
- Versions to withstand corrosive environments, shock and vibration
- Mounts and operates in any orientation

## OPTIONS

- Other temperature settings for single set point controls
- Custom finishes

## INCLUDES

- Adjustable temperature control
- Gasket and mounting hardware
- Power input line cord

## SPECIFICATIONS

| | MODEL | PART NUMBER | PERFORMANCE RATING BTU/HR | VOLTAGE VAC 50/60HZ | CURRENT AMPS. | WEIGHT LBS.(KG) | TEMP. CONTROL | OPERATING AMBIENT TEMPERATURE AMBIENT °C | OPERATING ENCLOSURE TEMPERATURE RANGE °C | AGENCY APPROVALS |
|---|---|---|---|---|---|---|---|---|---|---|
| NEMA 12 | AHP-1200FF | 0-3090-0-000 | 500-550 | 120 | 4.0 | 21(9.5) | None | -40/+70 | -10/+60 | UL1995/CSA22.2 |
| | AHP-1200FF | 0-3080-0-000 | 500-550 | 120 | 4.0 | 21(9.5) | TC-6F | -40/+70 | -10/+60 | UL1995/CSA22.2 |
| | AHP-1200FF | 0-30F0-0-000 | 500-550 | 120 | 4.0 | 21(9.5) | 85°F (30°C) | -40/+70 | -10/+60 | UL1995/CSA22.2 |
| | AHP-1200FF | 0-3050-0-000 | 500-550 | 120 | 4.0 | 21(9.5) | EXT* | -40/+70 | -10/+60 | UL1995/CSA22.2 |
| | AHP-1200FFHC | 0-3030-1-000 | 500-550 | 120 | 4.0 | 21(9.5) | TC-3F | -40/+70 | -10/+60 | UL1995/CSA22.2 |
| | AHP-1200FFHC | 0-3050-1-000 | 500-550 | 120 | 4.0 | 21(9.5) | EXT* | -40/+70 | -10/+60 | UL1995/CSA22.2 |
| | AHP-1201FF | 0-3081-0-000 | 500-550 | 120/240 | 4.0/2.2 | 29(13.2) | TC-6F | -40/+70 | -10/+60 | UL1995/CSA22.2 |
| | AHP-1201FF | 0-3051-0-000 | 500-550 | 120/240 | 4.0/2.2 | 29(13.2) | EXT* | -40/+70 | -10/+60 | UL1995/CSA22.2 |
| | AHP-1201FF | 0-30F1-0-000 | 500-550 | 120/240 | 4.0/2.2 | 29(13.2) | 85°F (30°C) | -40/+70 | -10/+60 | UL1995/CSA22.2 |
| | AHP-1201FFHC | 0-3031-1-000 | 500-550 | 120/240 | 4.0/2.2 | 29(13.2) | TC-3F | -40/+70 | -10/+60 | UL1995/CSA22.2 |
| | AHP-1201FFHC | 0-3051-1-000 | 500-550 | 120/240 | 4.0/2.2 | 29(13.2) | EXT* | -40/+70 | -10/+60 | UL1995/CSA22.2 |
| NEMA 4 | AHP-1200XE | 0-3080-4-000 | 500-550 | 120 | 5.0 | 23(10.4) | TC-6F | -40/+70 | -10/+60 | UL1995/CSA22.2 |
| | AHP-1200XE | 0-3050-4-000 | 500-550 | 120 | 5.0 | 23(10.4) | EXT* | -40/+70 | -10/+60 | UL1995/CSA22.2 |
| | AHP-1200XE | 0-30F0-4-000 | 500-550 | 120 | 5.0 | 23(10.4) | 85°F (30°C) | -40/+70 | -10/+60 | UL1995/CSA22.2 |
| | AHP-1200XEHC | 0-3030-5-000 | 500-550 | 120 | 5.0 | 23(10.4) | TC-3F | -40/+70 | -10/+60 | UL1995/CSA22.2 |
| | AHP-1200XEHC | 0-3050-5-000 | 500-550 | 120 | 5.0 | 23(10.4) | EXT* | -40/+70 | -10/+60 | UL1995/CSA22.2 |
| | AHP-1202XE | 0-3082-4-000 | 500-550 | 240 | 2.5 | 30(13.6) | TC-6F | -40/+70 | -10/+60 | UL1995/CSA22.2 |
| | AHP-1202XE | 0-3052-4-000 | 500-550 | 240 | 2.5 | 30(13.6) | EXT* | -40/+70 | -10/+60 | UL1995/CSA22.2 |
| | AHP-1202XE | 0-30F2-4-000 | 500-550 | 240 | 2.5 | 30(13.6) | 85°F (30°C) | -40/+70 | -10/+60 | UL1995/CSA22.2 |
| | AHP-1202XEHC | 0-3032-5-000 | 500-550 | 240 | 2.5 | 30(13.6) | TC-3F | -40/+70 | -10/+60 | UL1995/CSA22.2 |
| | AHP-1202XEHC | 0-3052-5-000 | 500-550 | 240 | 2.5 | 30(13.6) | EXT* | -40/+70 | -10/+60 | UL1995/CSA22.2 |
| NEMA 4X | AHP-1200X | 0-3090-2-000 | 500-550 | 120 | 4.0 | 23(10.4) | None | -40/+70 | -10/+60 | UL1995/CSA22.2 |
| | AHP-1200X | 0-3080-2-000 | 500-550 | 120 | 4.0 | 23(10.4) | TC-6F | -40/+70 | -10/+60 | UL1995/CSA22.2 |
| | AHP-1200X | 0-3050-2-000 | 500-550 | 120 | 4.0 | 23(10.4) | EXT* | -40/+70 | -10/+60 | UL1995/CSA22.2 |
| | AHP-1200X | 0-30F0-2-000 | 500-550 | 120 | 4.0 | 23(10.4) | 85°F (30°C) | -40/+70 | -10/+60 | UL1995/CSA22.2 |
| | AHP-1200XHC | 0-3030-3-000 | 500-550 | 120 | 4.0 | 23(10.4) | TC-3F | -40/+70 | -10/+60 | UL1995/CSA22.2 |
| | AHP-1200XHC | 0-3050-3-000 | 500-550 | 120 | 4.0 | 23(10.4) | EXT* | -40/+70 | -10/+60 | UL1995/CSA22.2 |
| | AHP-1200XM | 0-3080-2-100 | 500-550 | 120 | 4.0 | 23(10.4) | TC-6F | -40/+70 | -10/+60 | UL1995/CSA22.2 |
| | AHP-1200XM | 0-3050-2-100 | 500-550 | 120 | 4.0 | 23(10.4) | EXT* | -40/+70 | -10/+60 | UL1995/CSA22.2 |
| | AHP-1200XMHC | 0-3030-3-001 | 500-550 | 120 | 4.0 | 23(10.4) | TC-3F | -40/+70 | -10/+60 | UL1995/CSA22.2 |
| | AHP-1200XMHC | 0-3050-3-001 | 500-550 | 120 | 4.0 | 23(10.4) | EXT* | -40/+70 | -10/+60 | UL1995/CSA22.2 |

* Unit is set for 5-32 VDC external signal, relay(s) included

EN 60335-1
EN60335-2-40

# AHP-1200

## PERFORMANCE CURVE

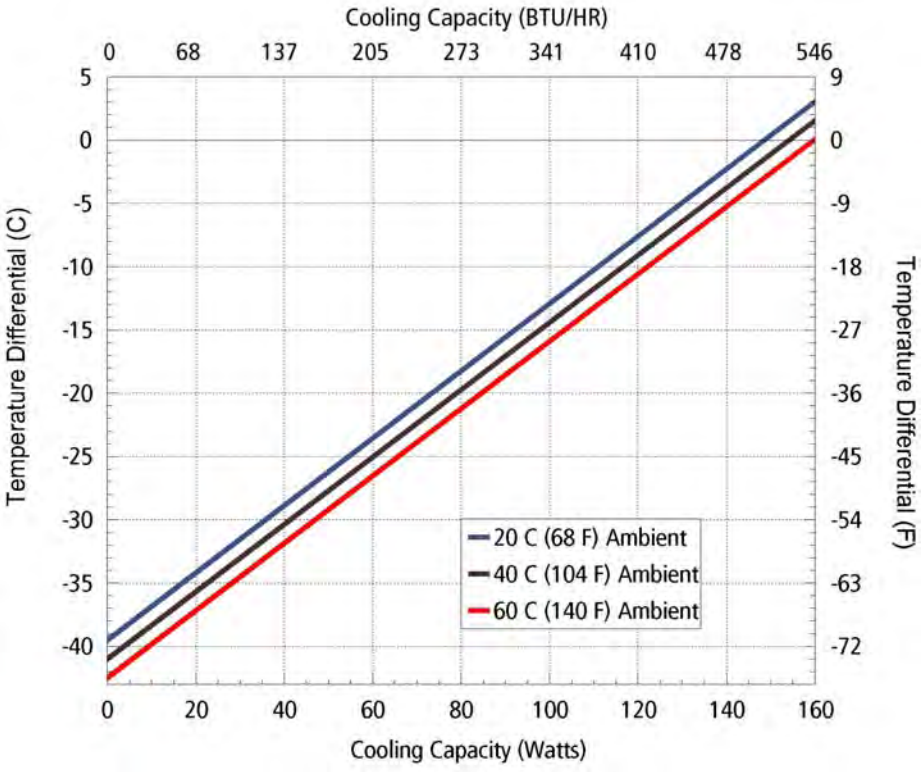


| Equation of line: y=ΔT(°C) x=Capacity (Watts) | | | |
|---|---|---|---|
| **Ambient Temp** | **20°C** | **40°C** | **60°C** |
| Enclosure Air | y=.266x-39.5 | y=.266x-41.0 | y=.266x-42.5 |
| Cold Sink | y=.173x-39.5 | y=.173x-41.0 | y=.173x-42.5 |

**MOUNTING STYLE**

Thru Mount

**ENVIRONMENTS SERVED**

NEMA-12 IP 52

NEMA-4,4X IP 56

**RATING (TRADITIONAL)**

530 BTU/hr @ 0 °F ΔT

670 BTU/hr @ +20 °F ΔT *

**RATING (DIN 3168)**

154 Watts L35 L35

100 Watts L35 L50

* See page 10

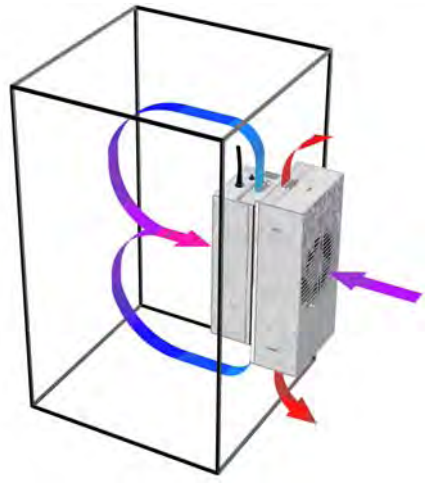

Air Flow Pattern

## DIMENSIONS

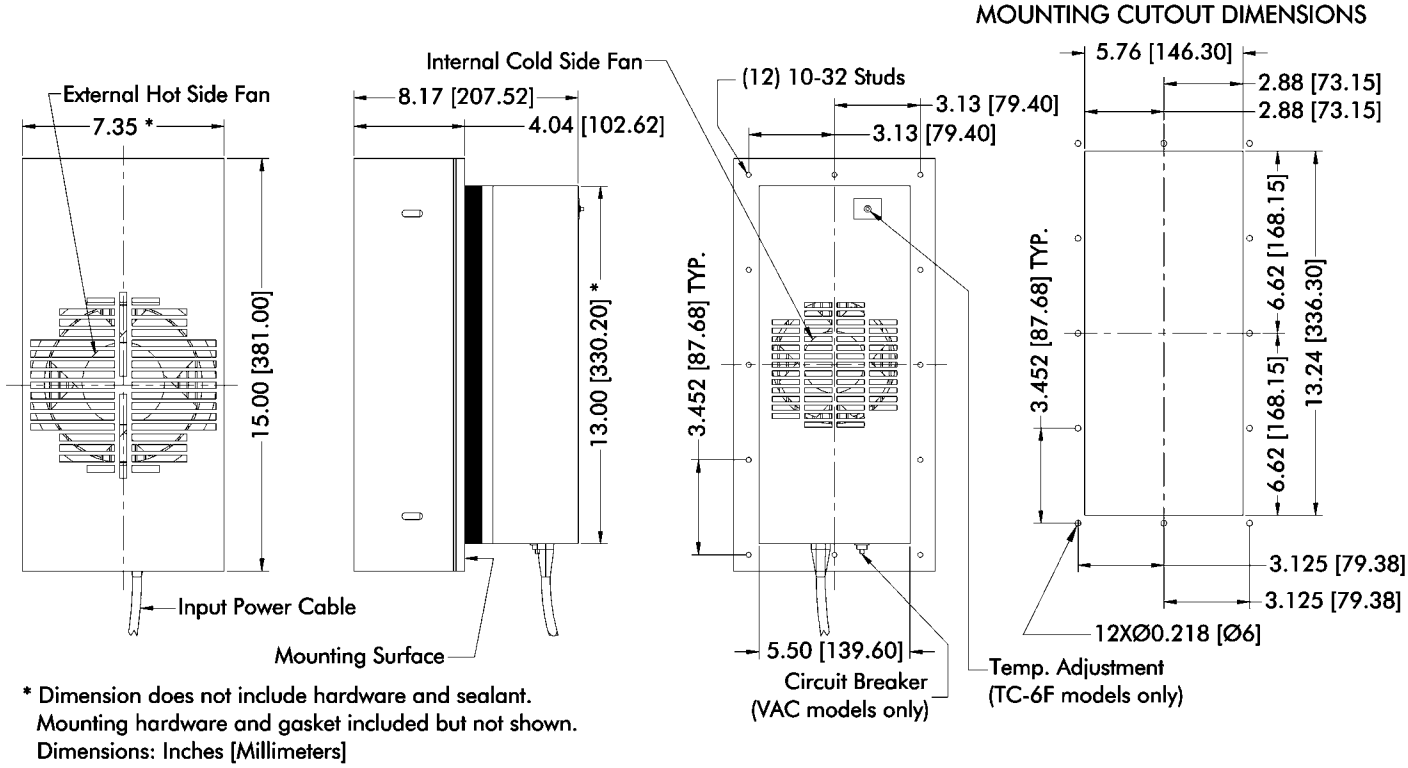


* Dimension does not include hardware and sealant.
Mounting hardware and gasket included but not shown.
Dimensions: Inches [Millimeters]

# AHP-1200 Air Conditioner

Air Cooled
Thru Mount
NEMA-12, 4,4X

24 VDC Input

## FEATURES

- Compact, (only 15"L X 7.35"W X 8.17"D)
- Weighs only 18 lbs. (8.2 kg)
- Excels in high ambient temperatures
- Environmentally safe
- Dual efficiency versions available
- No compressor, fluorocarbons or filters
- Virtually maintenance-free operation
- Stainless steel exterior housing
- Versions to withstand corrosive environments, shock and vibration
- Mounts and operates in any orientation

## INCLUDES

- Adjustable temperature control
- Gasket and mounting hardware
- Power input leads

## OPTIONS

- Other temperature settings for single set point controls
- Custom finishes

## SPECIFICATIONS

| | MODEL | PART NUMBER | NOTES | COP @ 0 °C ΔT L35 L35 | VOLTAGE VDC | RUNNING CURRENT AMPS. | WEIGHT LBS.(KG) | TEMP. CONTROL | OPERATING AMBIENT TEMPERATURE RANGE °C | OPERATING ENCLOSURE TEMPERATURE RANGE °C |
|---|---|---|---|---|---|---|---|---|---|---|
| NEMA 12 | AHP-1200 | 0-3095-0-000 | Cool only | 0.72 | 24(16-28) | 9.0 | 18 (8.2) | NONE | -40/+70 | -20/+70 |
| | AHP-1200 | 0-3085-0-000 | Cool only | 0.72 | 24(16-28) | 9.0 | 18 (8.2) | TC-6F | -40/+70 | -20/+70 |
| | AHP-1200 | 0-30F5-0-000 | Cool only | 0.72 | 24(16-28) | 9.0 | 18 (8.2) | 85°F (30°C) | -40/+70 | -20/+70 |
| | AHP-1200 | 0-3055-0-000 | Cool only | 0.72 | 24(16-28) | 9.0 | 18 (8.2) | EXT* | -40/+70 | -20/+70 |
| | AHP-1200HC | 0-3035-1-000 | Heat/Cool | 0.72 | 24(16-28) | 9.0 | 18 (8.2) | TC-3F | -40/+70 | -20/+70 |
| | AHP-1200HC | 0-30I5-1-000 | Heat/Cool | 0.72 | 24(16-28) | 9.0 | 18 (8.2) | TC-7F | -40/+70 | -20/+70 |
| | AHP-1200HC | 0-3055-1-000 | Heat/Cool | 0.72 | 24(16-28) | 9.0 | 18 (8.2) | EXT† | -40/+70 | -20/+70 |
| | AHP-1200HC | 0-30H5-1-000 | Heat/Cool | 0.72 | 24(16-28) | 9.0 | 18 (8.2) | TC-4600 | -40/+70 | -20/+70 |
| NEMA 4 | AHP-1200XE | 0-3095-4-000 | Cool only | 0.72 | 24(16-28) | 9.0 | 18 (8.2) | NONE | -40/+70 | -20/+70 |
| | AHP-1200XE | 0-3085-4-000 | Cool only | 0.72 | 24(16-28) | 9.0 | 18 (8.2) | TC-6F | -40/+70 | -20/+70 |
| | AHP-1200XE | 0-30F5-4-000 | Cool only | 0.72 | 24(16-28) | 9.0 | 18 (8.2) | 85°F (30°C) | -40/+70 | -20/+70 |
| | AHP-1200XE | 0-3055-4-000 | Cool only | 0.72 | 24(16-28) | 9.0 | 18 (8.2) | EXT* | -40/+70 | -20/+70 |
| | AHP-1200XEHC | 0-3035-5-000 | Heat/Cool | 0.72 | 24(16-28) | 9.0 | 18 (8.2) | TC-3F | -40/+70 | -20/+70 |
| | AHP-1200XEHC | 0-30I5-5-000 | Heat/Cool | 0.72 | 24(16-28) | 9.0 | 18 (8.2) | TC-7F | -40/+70 | -20/+70 |
| | AHP-1200XEHC | 0-3055-5-000 | Heat/Cool | 0.72 | 24(16-28) | 9.0 | 18 (8.2) | EXT† | -40/+70 | -20/+70 |
| | AHP-1200XEHC | 0-30H5-5-000 | Heat/Cool | 0.72 | 24(16-28) | 9.0 | 18 (8.2) | TC-4600 | -40/+70 | -20/+70 |
| NEMA 4X | AHP-1200X | 0-3095-2-000 | Cool only | 0.72 | 24(16-28) | 9.0 | 18 (8.2) | NONE | -40/+70 | -20/+70 |
| | AHP-1200X | 0-3085-2-000 | Cool only | 0.72 | 24(16-28) | 9.0 | 18 (8.2) | TC-6F | -40/+70 | -20/+70 |
| | AHP-1200X | 0-30F5-2-000 | Cool only | 0.72 | 24(16-28) | 9.0 | 18 (8.2) | 85°F (30°C) | -40/+70 | -20/+70 |
| | AHP-1200X | 0-3055-2-000 | Cool only | 0.72 | 24(16-28) | 9.0 | 18 (8.2) | EXT* | -40/+70 | -20/+70 |
| | AHP-1200XHC | 0-3035-3-000 | Heat/Cool | 0.72 | 24(16-28) | 9.0 | 18 (8.2) | TC-3F | -40/+70 | -20/+70 |
| | AHP-1200XHC | 0-30I5-3-000 | Heat/Cool | 0.72 | 24(16-28) | 9.0 | 18 (8.2) | TC-7F | -40/+70 | -20/+70 |
| | AHP-1200XHC | 0-3055-3-000 | Heat/Cool | 0.72 | 24(16-28) | 9.0 | 18 (8.2) | EXT† | -40/+70 | -20/+70 |
| | AHP-1200XHC | 0-30H5-3-000 | Heat/Cool | 0.72 | 24(16-28) | 9.0 | 18 (8.2) | TC-4600 | -40/+70 | -20/+70 |
| | AHP-1200XM** | 0-3085-2-034 | Cool only | 0.72 | 24(16-28) | 9.0 | 18 (8.2) | TC-6F | -40/+70 | -20/+70 |
| | AHP-1200XM** | 0-30F5-2-035 | Cool only | 0.72 | 24(16-28) | 9.0 | 18 (8.2) | 85°F (30°C) | -40/+70 | -20/+70 |
| | AHP-1200XM** | 0-3055-2-036 | Cool only | 0.72 | 24(16-28) | 9.0 | 18 (8.2) | EXT* | -40/+70 | -20/+70 |
| | AHP-1200XMHC** | 0-3035-3-037 | Heat/Cool | 0.72 | 24(16-28) | 9.0 | 18 (8.2) | TC-3F | -40/+70 | -20/+70 |
| | AHP-1200XMHC** | 0-30I5-3-040 | Heat/Cool | 0.72 | 24(16-28) | 9.0 | 18 (8.2) | TC-7F | -40/+70 | -20/+70 |
| | AHP-1200XMHC** | 0-3055-3-038 | Heat/Cool | 0.72 | 24(16-28) | 9.0 | 18 (8.2) | EXT† | -40/+70 | -20/+70 |
| | AHP-1200XMHC** | 0-30H5-3-039 | Heat/Cool | 0.72 | 24(16-28) | 9.0 | 18 (8.2) | TC-4600 | -40/+70 | -20/+70 |

* Unit is set for 5-32 VDC external signal, relay(s) included

** Full shock and vibration models

† Unit is set for 5-32 VDC external signal, H-Bridge quad pack relay(s) included

# AHP-1200

## PERFORMANCE CURVE

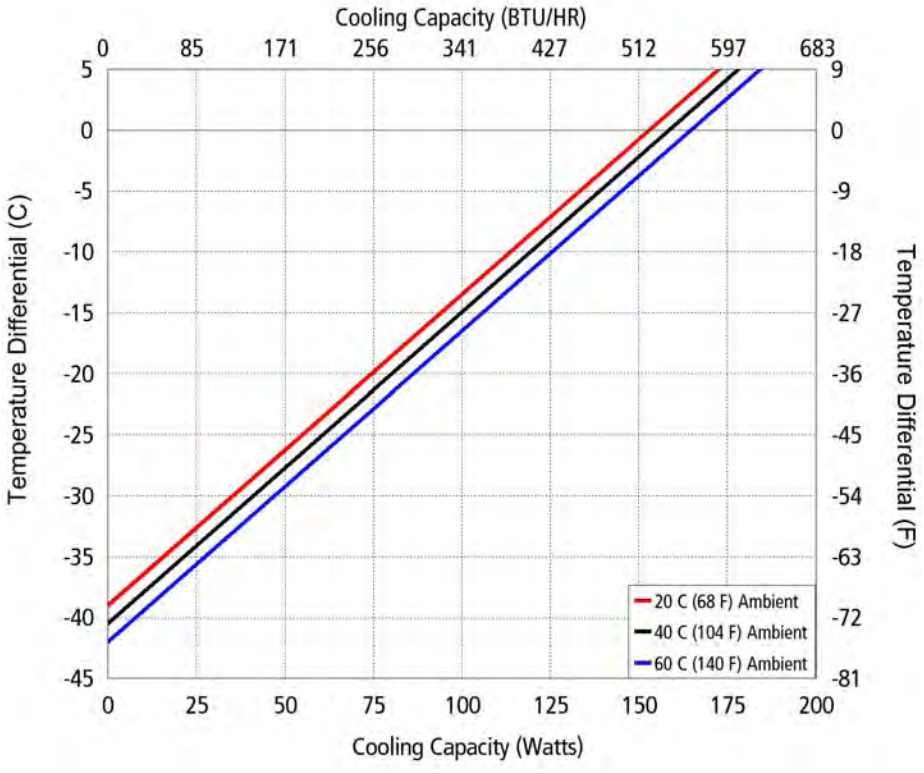


| Equation of line: y=ΔT(°C) x=Capacity (Watts) | | | |
|---|---|---|---|
| **Ambient Temp** | **20°C** | **40°C** | **60°C** |
| Enclosure Air | y=.255x-39.0 | y=.255x-41.0 | y=.255x-42.0 |
| Cold Sink | y=.166x-39.0 | y=.166x-41.0 | y=.166x-42.0 |

**MOUNTING STYLE**

Thru Mount

**ENVIRONMENTS SERVED**

NEMA-12 IP 52

NEMA-4,4X IP 56

**RATING (TRADITIONAL)**

530 BTU/hr @ 0 °F ΔT

670 BTU/hr @ +20 °F ΔT *

**RATING (DIN 3168)**

154 Watts L35 L35

100 Watts L35 L50

* See page 10

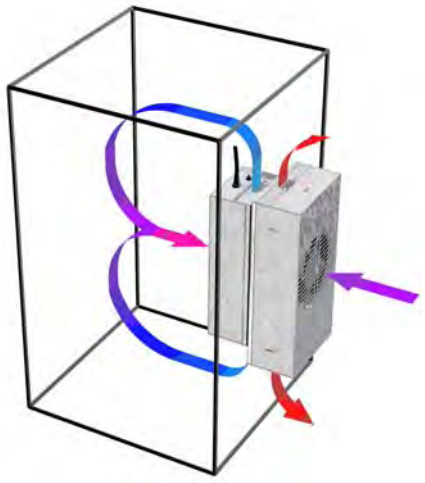

Air Flow Pattern

## DIMENSIONS

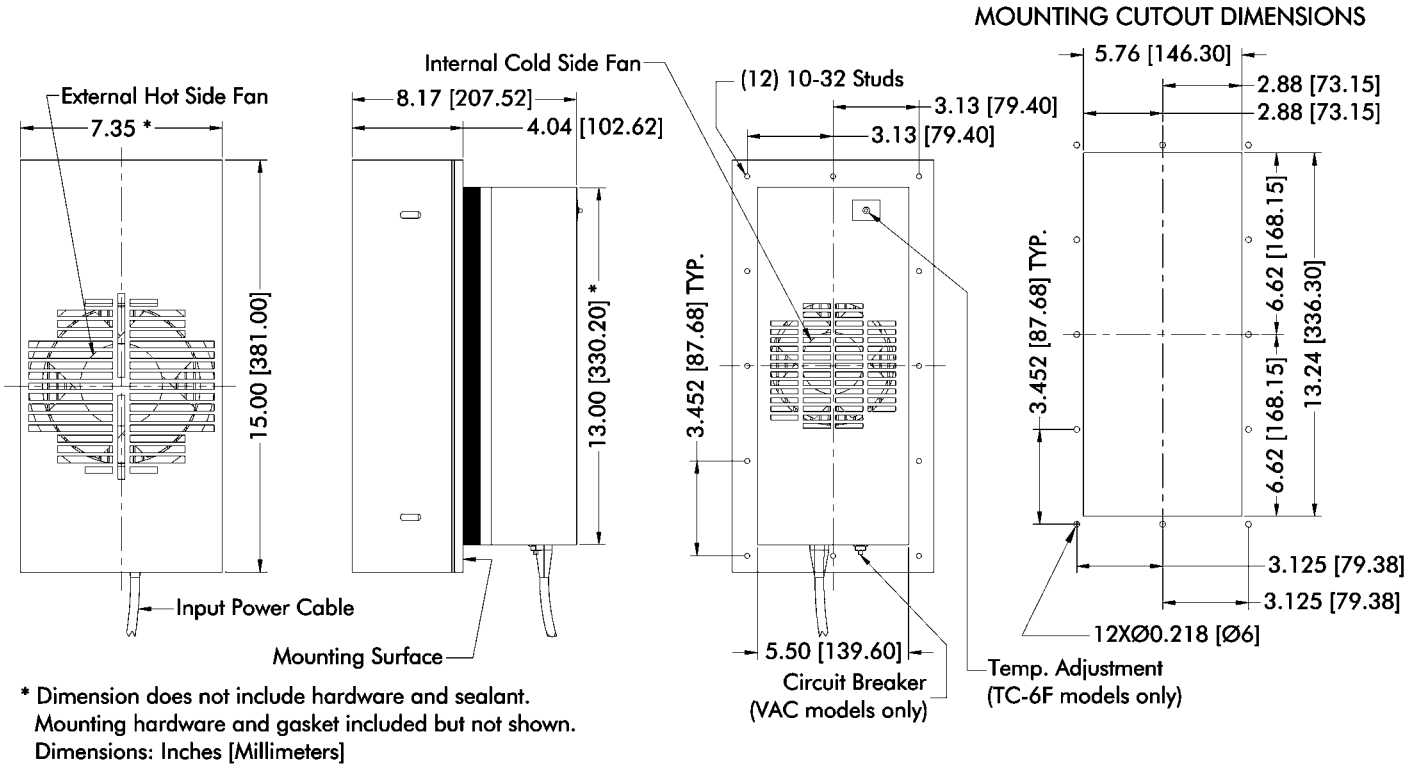


* Dimension does not include hardware and sealant.
Mounting hardware and gasket included but not shown.
Dimensions: Inches [Millimeters]

# AHP-1200EP | Air Conditioner

Air Cooled
Thru Mount
NEMA-12, 4X, Class I Div 2

120 VAC, 240 VAC Input
Hazardous Location

## FEATURES

- Compact, (only 15"L X 7.35"W X 8.17"D)
- Weighs only 21 lbs. (9.5 kg)
- Excels in high ambient temperatures
- Environmentally safe
- Dual voltage versions available
- No compressor, fluorocarbons or filters
- Virtually maintenance-free operation
- Stainless steel exterior housing
- Versions to withstand corrosive environments, shock and vibration
- Mounts and operates in any orientation
- Groups A, B, C, D

## INCLUDES

- Adjustable temperature control
- Gasket and mounting hardware
- Power input line cord

## OPTIONS

- Other temperature settings for single set point controls

C ETL LISTED US
Intertek

## SPECIFICATIONS

| | MODEL | PART NUMBER | PERFORMANCE RATING BTU/HR | VOLTAGE VAC 50/60HZ | CURRENT AMPS. | WEIGHT LBS.(KG) | TEMP. CONTROL | OPERATING AMBIENT TEMPERATURE AMBIENT °C | OPERATING ENCLOSURE TEMPERATURE RANGE °C | AGENCY APPROVALS |
|---|---|---|---|---|---|---|---|---|---|---|
| NEMA 12 CID 2 | AHP-1200EP | 0-3080-0-003 | 500-550 | 120 | 4.0 | 21(9.5) | TC-6F | -40/+63 | -10/+60 | UL1604/UL1995/CSA22.2 |
| | AHP-1200EP | 0-30F0-0-004 | 500-550 | 120 | 4.0 | 21(9.5) | 85°F (30°C) | -40/+63 | -10/+60 | UL1604/UL1995/CSA22.2 |
| | AHP-1200EP-1 | 0-3070-0-010 | 500-550 | 120 | 4.0 | 21(9.5) | EXT* | -40/+63 | -10/+60 | UL1604/UL1995/CSA22.2 |
| | AHP-1200EPHC | 0-3030-1-007 | 500-550 | 120 | 4.0 | 21(9.5) | TC-3F | -40/+63 | -10/+60 | UL1604/UL1995/CSA22.2 |
| | AHP-1200EPHC-1 | 0-3070-1-009 | 500-550 | 120 | 4.0 | 21(9.5) | EXT* | -40/+63 | -10/+60 | UL1604/UL1995/CSA22.2 |
| | AHP-1201EP | 0-3081-0-003 | 500-550 | 120/240 | 4.0/2.0 | 29(13.2) | TC-6F | -40/+63 | -10/+60 | UL1604/UL1995/CSA22.2 |
| | AHP-1201EP | 0-30F1-0-004 | 500-550 | 120/240 | 4.0/2.0 | 29(13.2) | 85°F (30°C) | -40/+63 | -10/+60 | UL1604/UL1995/CSA22.2 |
| | AHP-1201EP-1 | 0-3071-0-010 | 500-550 | 120/240 | 4.0/2.0 | 29(13.2) | EXT* | -40/+63 | -10/+60 | UL1604/UL1995/CSA22.2 |
| | AHP-1201EPHC | 0-3031-1-007 | 500-550 | 120/240 | 4.0/2.0 | 29(13.2) | TC-3F | -40/+63 | -10/+60 | UL1604/UL1995/CSA22.2 |
| | AHP-1201EPHC-1 | 0-3071-1-009 | 500-550 | 120/240 | 4.0/2.0 | 29(13.2) | EXT* | -40/+63 | -10/+60 | UL1604/UL1995/CSA22.2 |
| NEMA 4X CID 2 | AHP-1200XP | 0-3080-2-003 | 500-550 | 120 | 4.0 | 21(9.5) | TC-6F | -40/+71 | -10/+60 | UL1604/UL1995/CSA22.2 |
| | AHP-1200XP | 0-30F0-2-004 | 500-550 | 120 | 4.0 | 21(9.5) | 85°F (30°C) | -40/+71 | -10/+60 | UL1604/UL1995/CSA22.2 |
| | AHP-1200XP-1 | 0-3070-2-010 | 500-550 | 120 | 4.0 | 21(9.5) | EXT* | -40/+71 | -10/+60 | UL1604/UL1995/CSA22.2 |
| | AHP-1200XPHC | 0-3030-3-007 | 500-550 | 120 | 4.0 | 21(9.5) | TC-3F | -40/+71 | -10/+60 | UL1604/UL1995/CSA22.2 |
| | AHP-1200XPHC-1 | 0-3070-3-009 | 500-550 | 120 | 4.0 | 21(9.5) | EXT* | -40/+71 | -10/+60 | UL1604/UL1995/CSA22.2 |
| | AHP-1201XP | 0-3081-2-014 | 500-550 | 120/240 | 4.0/2.0 | 29(13.2) | TC-6F | -40/+71 | -10/+60 | UL1604/UL1995/CSA22.2 |
| | AHP-1201XP | 0-30F1-2-020 | 500-550 | 120/240 | 4.0/2.0 | 29(13.2) | 85°F (30°C) | -40/+71 | -10/+60 | UL1604/UL1995/CSA22.2 |
| | AHP-1201XP-1 | 0-3071-2-012 | 500-550 | 120/240 | 4.0/2.0 | 29(13.2) | EXT* | -40/+71 | -10/+60 | UL1604/UL1995/CSA22.2 |
| | AHP-1201XPHC | 0-3031-3-011 | 500-550 | 120/240 | 4.0/2.0 | 29(13.2) | TC-3F | -40/+71 | -10/+60 | UL1604/UL1995/CSA22.2 |
| | AHP-1201XPHC-1 | 0-3071-3-013 | 500-550 | 120/240 | 4.0/2.0 | 29(13.2) | EXT* | -40/+71 | -10/+60 | UL1604/UL1995/CSA22.2 |

* Unit is set for 5-32 VDC external signal, relay(s) included

# AHP-1200EP

## PERFORMANCE CURVE

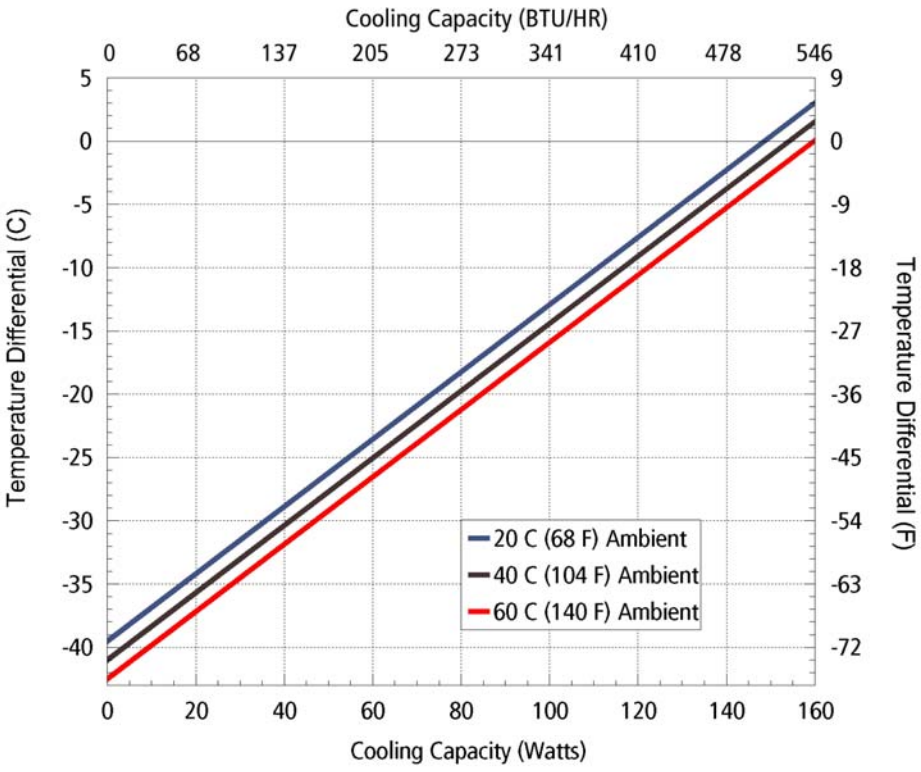


| Equation of line: y=ΔT(°C) x=Capacity (Watts) | | | |
|---|---|---|---|
| **Ambient Temp** | **20°C** | **40°C** | **60°C** |
| Enclosure Air | y=.266x-39.5 | y=.266x-41.0 | y=.266x-42.5 |
| Cold Sink | y=.173x-39.5 | y=.173x-41.0 | y=.173x-42.5 |

**MOUNTING STYLE**

Thru Mount

**ENVIRONMENTS SERVED**

Class 1 Div 2 NEMA-12 IP 52

Class 1 Div 2 NEMA-4X IP 56

**RATING (TRADITIONAL)**

530 BTU/hr @ 0 °F ΔT

670 BTU/hr @ +20 °F ΔT *

**RATING (DIN 3168)**

154 Watts L35 L35

100 Watts L35 L50

* See page 10

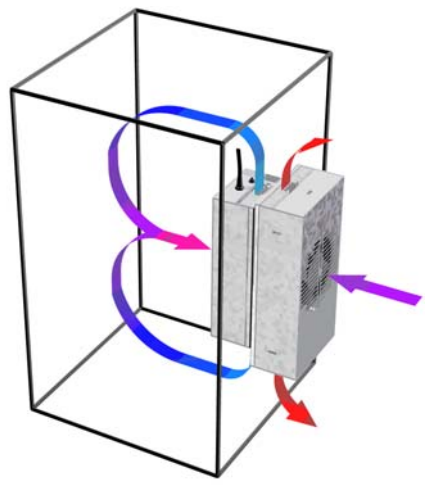

Air Flow Pattern

## DIMENSIONS

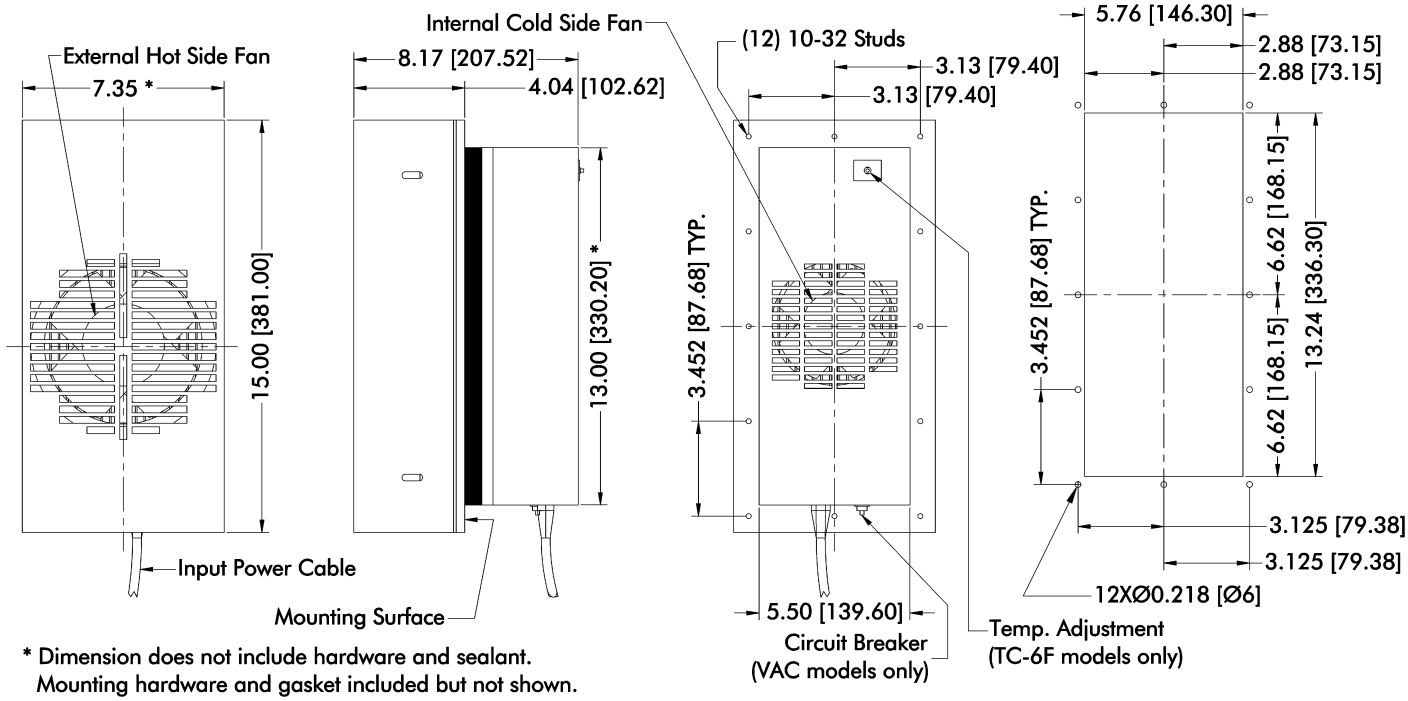


* Dimension does not include hardware and sealant.
Mounting hardware and gasket included but not shown.
Dimensions: Inches [Millimeters]

# AHP-1200CXP

## Hazardous Location Air Conditioner

**North American** Air Cooled
Thru Mount
Class I, Division 1 Groups B, C, D

### FEATURES

- Compact, (only 15"L X 7.35"W X 14"D)
- Weighs only 36 lbs. (16.4 kg)
- Excels in high ambient temperatures
- Environmentally safe
- Vortex Air Amplifier included
- Virtually maintenance-free operation
- Stainless steel exterior housing
- Mounts and operates in any orientation

### REQUIREMENTS

- Clean and dry compressed air supply
- Purged enclosure
- 120 VAC Input voltage

### INCLUDES

- Mounting gasket and hardware
- Power input line cord

### PERFORMANCE CURVE

25°C Ambient

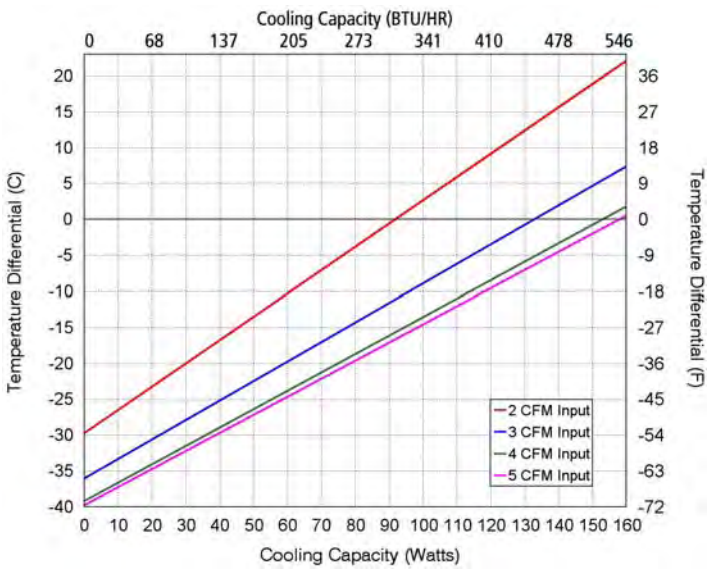


60°C Ambient

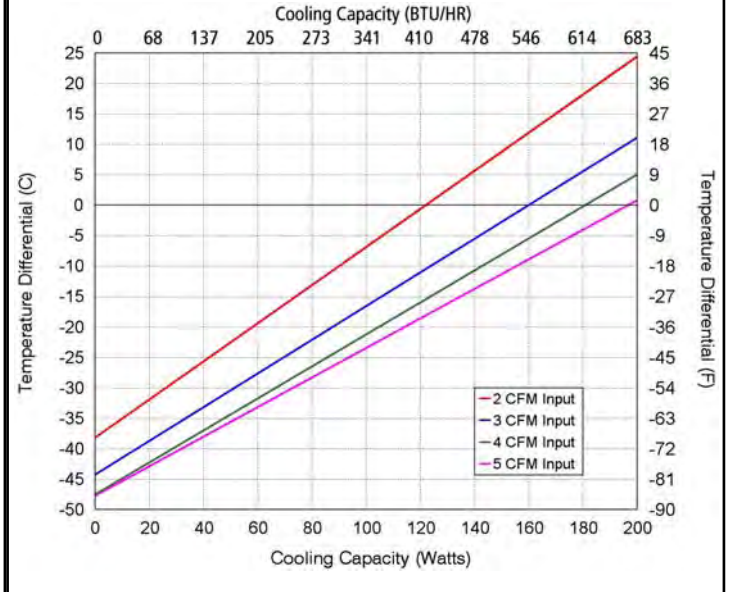

# AHP-1200CXP

- Thru Mount
- Class I, Division 1
- Groups B, C, D
- 307-680 BTU/hr
- NEMA-4/4X

## LISTING & CLASSIFICATION:

The AHP-1200CXP by TECA is the first solid state air conditioner designed for use in Class I Division 1 Groups B, C and D hazardous environments in North America. The AHP-1200CXP features a unique air moving device that eliminates static discharge that traditional fans can generate. A compressed air line is required for the air moving device. The AHP-1200CXP has been used successfully in pharmaceutical plants on analyzers that monitor chemical reactions.

As an integral part of a larger system AHP-1200CXP has been investigated in accordance with UL 3111-1, First Edition, Rev. 6/94 Electrical Equipment for laboratory Use and CSA C22.2 No. 1010.1-92 Safety requirements for Electrical Equipment for Measurement, Control, and Laboratory Use.

As an integral part of a larger system it has been investigated in accordance with NFPA 496 Edition Purged and pressurized Enclosure for Electrical Equipment.

## SPECIFICATIONS

| MODEL | PART NUMBER | NOTES | PERFORMANCE RATING (BTU/HR) | VOLTAGE (VAC 50/60 HZ) | CURRENT AMPS. | WEIGHT LBS.(KG) | TEMP. CONTROL | OPERATING AMBIENT (°C) |
|---|---|---|---|---|---|---|---|---|
| AHP-1200CXP | 0-3070-2-016 | Cool Only | 307-680 | 120 | 4.0 | 36 (16.4) | EXT* | -20/+40 |

* Unit is set for 5-32 VDC external control signal, relay(s) included

## DIMENSIONS

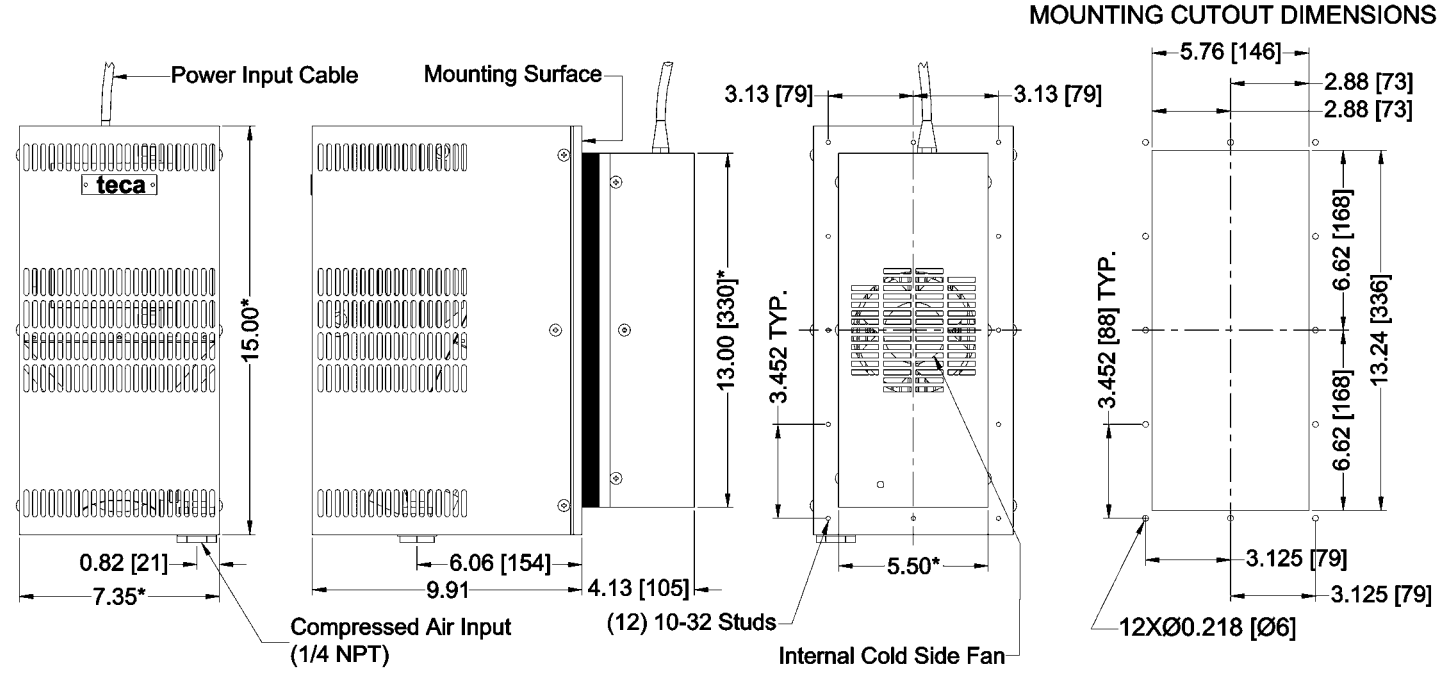


* Dimension does not include hardware and sealant.
Mounting hardware and gasket included but not shown.
Dimensions: Inches [Millimeters]

# AHP-1200CXP

## European

Air Cooled
Thru Mount
Group II, Catagory 2 [1] G
EExd p d [ia] ia IIB+H2 T4

# Hazardous Location Air Conditioner

## FEATURES

- Compact, (only 15"L X 7.35"W X 18.4"D)
- Weighs only 39 lbs. (17.7kg)
- Excels in high ambient temperatures
- Environmentally safe
- Vortex Air Amplifier included
- Virtually maintenance-free operation
- Stainless steel exterior housing
- Mounts and operates in any orientation

## REQUIREMENTS

- Clean and dry compressed air supply
- Purged enclosure
- 120 VAC Input voltage

## INCLUDES

- Mounting gasket and hardware
- Power input line cord

## PERFORMANCE CURVE

25°C Ambient

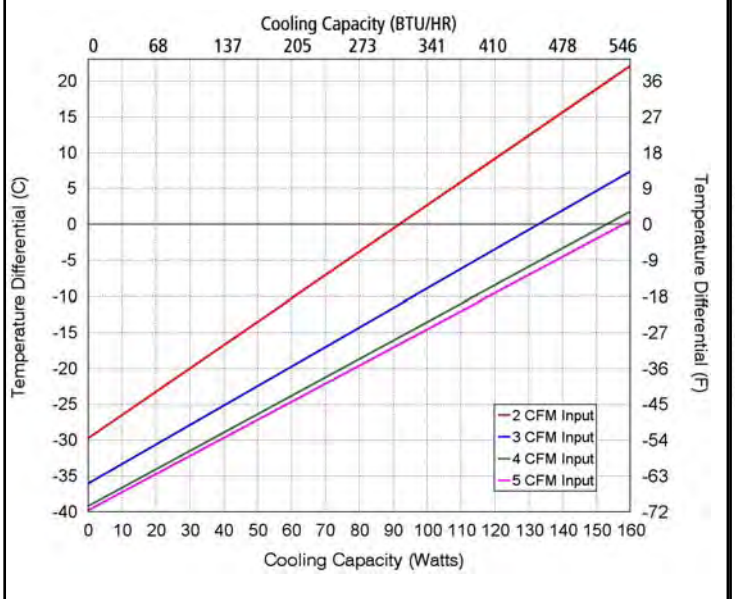


60°C Ambient

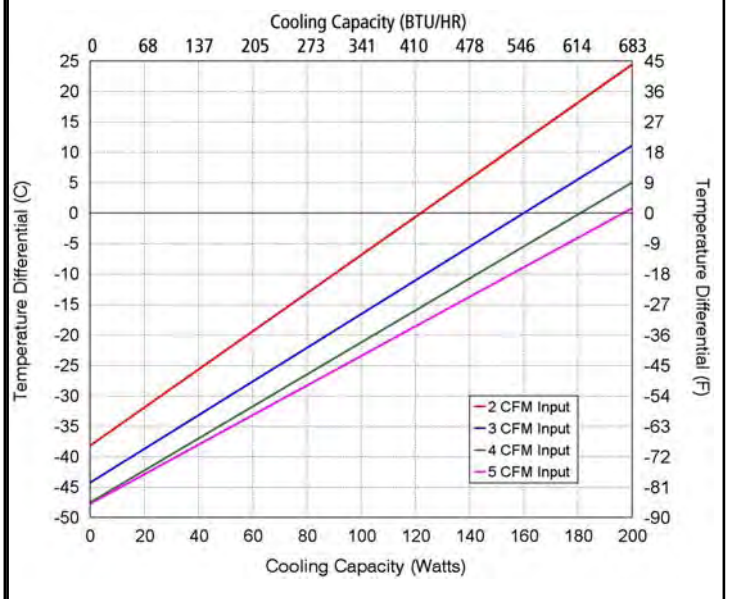

# AHP-1200CXP

Thru Mount

Group II, Catagory 2 [1] G

EEx p d [ia] ia IIB+H2 T4

307-680 BTU/hr

## LISTING & CLASSIFICATION:

The AHP-1200CXP is TECA's first solid state air conditioner designed for use in hazardous environments in the United Kingdom and European Union. The AHP-1200CXP features a unique air moving device that eliminates static discharge that traditional fans can generate. A compressed air line is required for the air moving device. The AHP-1200CXP has been successfully implemented with a purged enclosure and other approved equipment in pharmaceutical, petrochemical and other similar applications.

Directive 94/9/EC with reference to EN50014:1997/A2:1999, EN50016:2002.

Procedure XF011, XF013

Group II, Category 2 [1] G EEx p d [ia] ia IIB+H2 T4 Ta=-20 °C to +40 °C

## SPECIFICATIONS

| MODEL | PART NUMBER | NOTES | PERFORMANCE RATING (BTU/HR) | VOLTAGE (VAC 50/60 HZ) | CURRENT AMPS. | WEIGHT LBS.(KG) | TEMP. CONTROL | OPERATING AMBIENT (°C) |
|---|---|---|---|---|---|---|---|---|
| AHP-1200CXP | 0-3070-2-018 | Cool Only | 307-680 | 120 | 4.0 | 39(17.7) | EXT* | -20/+40 |

* Unit is set for 5-32 VDC external extenal control signal, relay(s) included

## DIMENSIONS

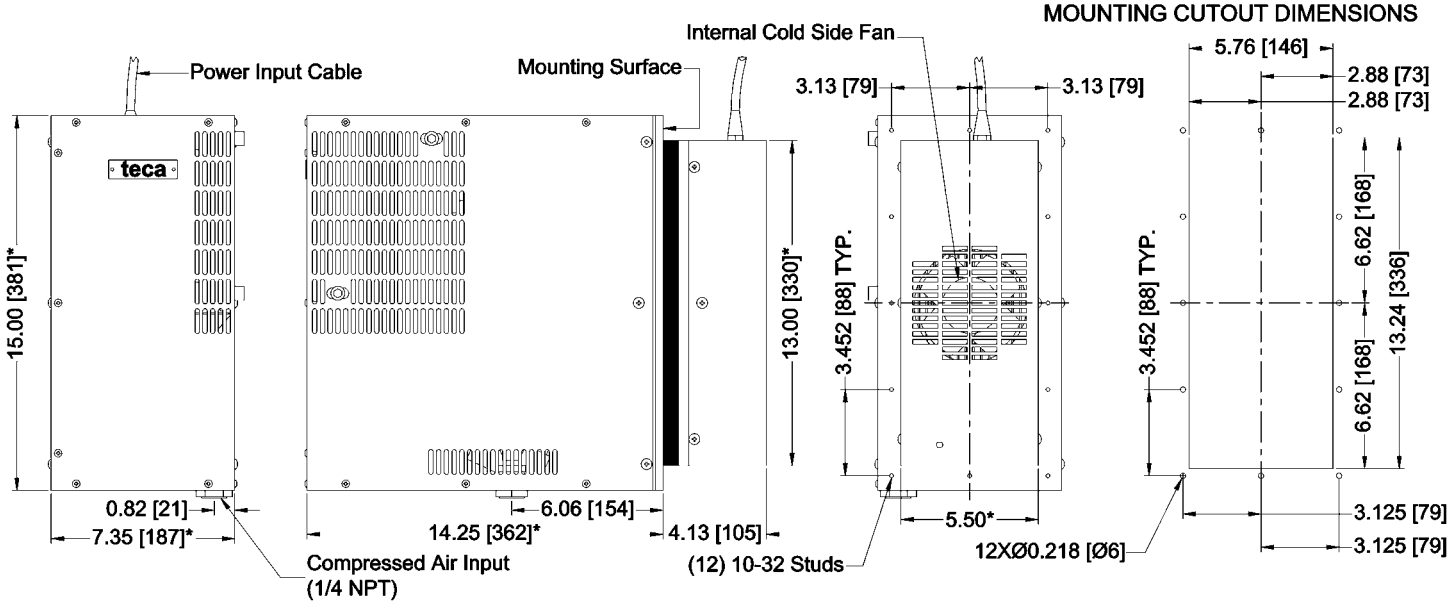


* Dimension does not include hardware and sealant.
Mounting hardware and gasket included but not shown.
Dimensions: Inches [Millimeters]

# AHP-500 | Air Conditioner Series

Air Cooled
Thru Mount
Nema-12, 4, 4X

24 VDC

## FEATURES

- Compact (only 10" X 5.84" X 7.75")
- Weighs only approximately 14 lbs. (6.4 kg)
- Mounts and operates in any orientation: horizontal, vertical, etc.
- Low vibration and noise
- No moving parts except fans
- Environmentally safe
- No compressor, fluorocarbons or filters
- Virtually maintenance-free operation
- Stainless steel exterior housing
- Efficient heat exchanger mode

## INCLUDES

- Gasket and mounting hardware
- Hook-up leads
- Mounting hardware
- Temperature control

## OPTIONS

- Internal mounting
- Custom finishes or no cover
- Different temperature controls
- Consult factory for other voltages

## SPECIFICATIONS

| | MODEL | PART NUMBER | NOTES | COP @ 0 °C ΔT L35 L35 | VOLTAGE VDC | CURRENT AMPS. | TEMP. CONTROL | OPERATING AMBINET TEMPERATURE RANGE °C | OPERATING ENCLOSURE TEMPERATURE RANGE °C |
|---|---|---|---|---|---|---|---|---|---|
| NEMA 12 | AHP-570 | 0-G0F5-0-000 | Cool Only | 1.25 | 24 | 3.0 | 85°F (30°C) | -10/+70 | -10/+60 |
| | AHP-570HC | 0-G095-1-000 | Heat/Cool † | 1.25 | 24 | 3.0 | None* | -10/+70 | -10/+60 |
| | AHP-570HC | 0-G0I5-1-000 | Heat/Cool | 1.25 | 24 | 3.0 | TC-7F | -10/+70 | -10/+60 |
| | AHP-590 | 0-G0F5-0-001 | Cool Only | 0.85 | 24 | 6.9 | 85°F (30°C) | -10/+70 | -10/+60 |
| | AHP-590HC | 0-G095-1-001 | Heat/Cool † | 0.85 | 24 | 6.9 | None* | -10/+70 | -10/+60 |
| | AHP-590HC | 0-G0I5-1-001 | Heat/Cool | 0.85 | 24 | 6.9 | TC-7F | -10/+70 | -10/+60 |
| NEMA 4 | AHP-570XE | 0-G0F5-4-000 | Cool Only | 1.25 | 24 | 3.0 | 85°F (30°C) | -20/+70 | -10/+60 |
| | AHP-570XEHC | 0-G095-5-000 | Heat/Cool † | 1.25 | 24 | 3.0 | None* | -20/+70 | -10/+60 |
| | AHP-570XEHC | 0-G0I5-5-000 | HeatCool | 1.25 | 24 | 3.0 | TC-7F | -20/+70 | -10/+60 |
| | AHP-590XE | 0-G0F5-4-001 | Cool Only | 0.85 | 24 | 6.9 | 85°F (30°C) | -20/+70 | -10/+60 |
| | AHP-590XEHC | 0-G095-5-001 | Heat/Cool † | 0.85 | 24 | 6.9 | None* | -20/+70 | -10/+60 |
| | AHP-590XEHC | 0-G0I5-5-001 | Heat/Cool | 0.85 | 24 | 6.9 | TC-7F | -20/+70 | -10/+60 |
| NEMA 4X | AHP-570X | 0-G0F5-2-000 | Cool Only | 1.25 | 24 | 3.0 | 85°F (30°C) | -40/+70 | -10/+60 |
| | AHP-570XHC | 0-G095-3-000 | Heat/Cool † | 1.25 | 24 | 3.0 | None* | -40/+70 | -10/+60 |
| | AHP-570XHC | 0-G0I5-3-000 | Heat/Cool | 1.25 | 24 | 3.0 | TC-7F | -40/+70 | -10/+60 |
| | AHP-590X | 0-G0F5-2-001 | Cool Only | 0.85 | 24 | 6.9 | 85°F (30°C) | -40/+70 | -10/+60 |
| | AHP-590XHC | 0-G095-3-001 | Heat/Cool † | 0.85 | 24 | 6.9 | None* | -40/+70 | -10/+60 |
| | AHP-590XHC | 0-G0I5-3-001 | Heat/Cool | 0.85 | 24 | 6.9 | TC-7F | -40/+70 | -10/+60 |

* For controller options contact TECA

† Heating function via reverse polarity (controller dependent)

# AHP-500

## PERFORMANCE CURVE

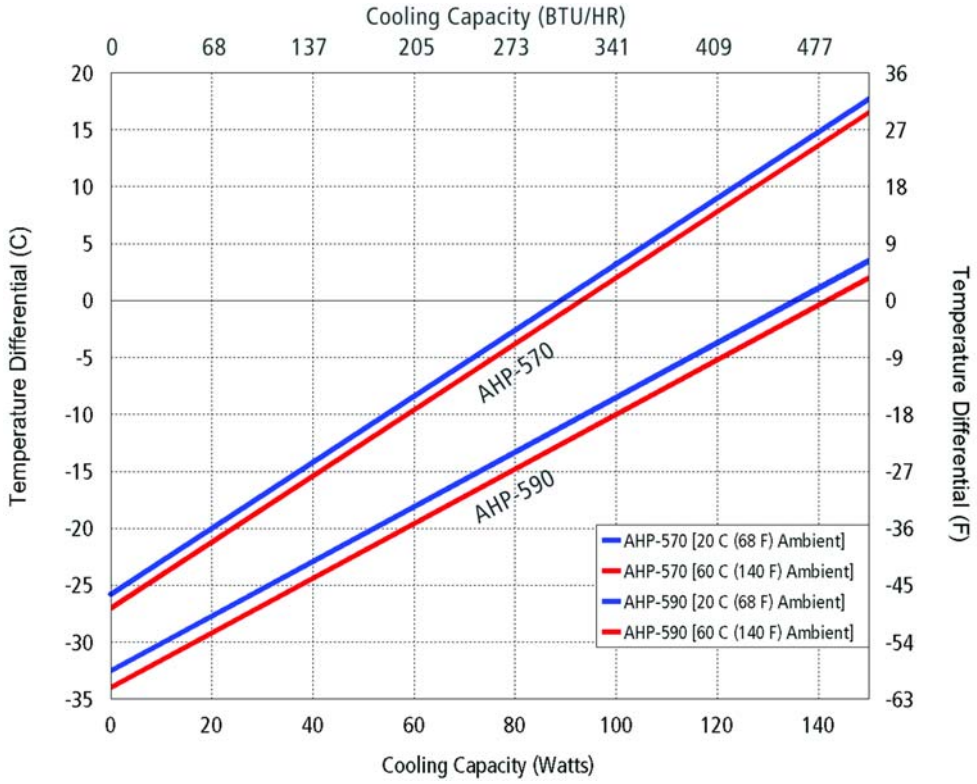


| Equation of Line: y=ΔT(°C) x=Capacity (Watts) | | |
|---|---|---|
| **Ambient Temp** | **20°C** | **60°C** |
| AHP-570 | y=.29x-25.8 | y=.29x-27 |
| AHP-590 | y=.25x-32.5 | y=.25x-35 |

**MOUNTING STYLE**

Thru Mount

**ENVIRONMENTS SERVED**

NEMA-12 IP 52

NEMA-4,4X IP 56

**RATING (TRADITIONAL)**

AHP-570 303 BTU/hr @ 0 °F ΔT

432 BTU/hr @ +20 °F ΔT

AHP-590 460 BTU/hr @ 0 °F ΔT

593 BTU/hr @ +20 °F ΔT

**RATING (DIN 3168)**

AHP-570 90 Watts L35 L35

40 Watts L35 L50

AHP-590 137 Watts L35 L35

75 Watts L35 L50

✱ See page 10

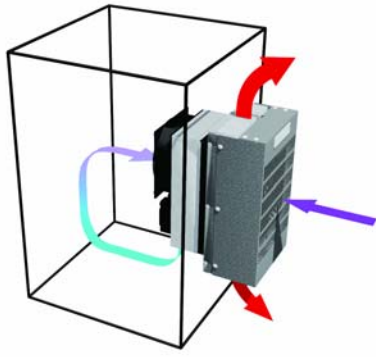

Air Flow Pattern

## DIMENSIONS

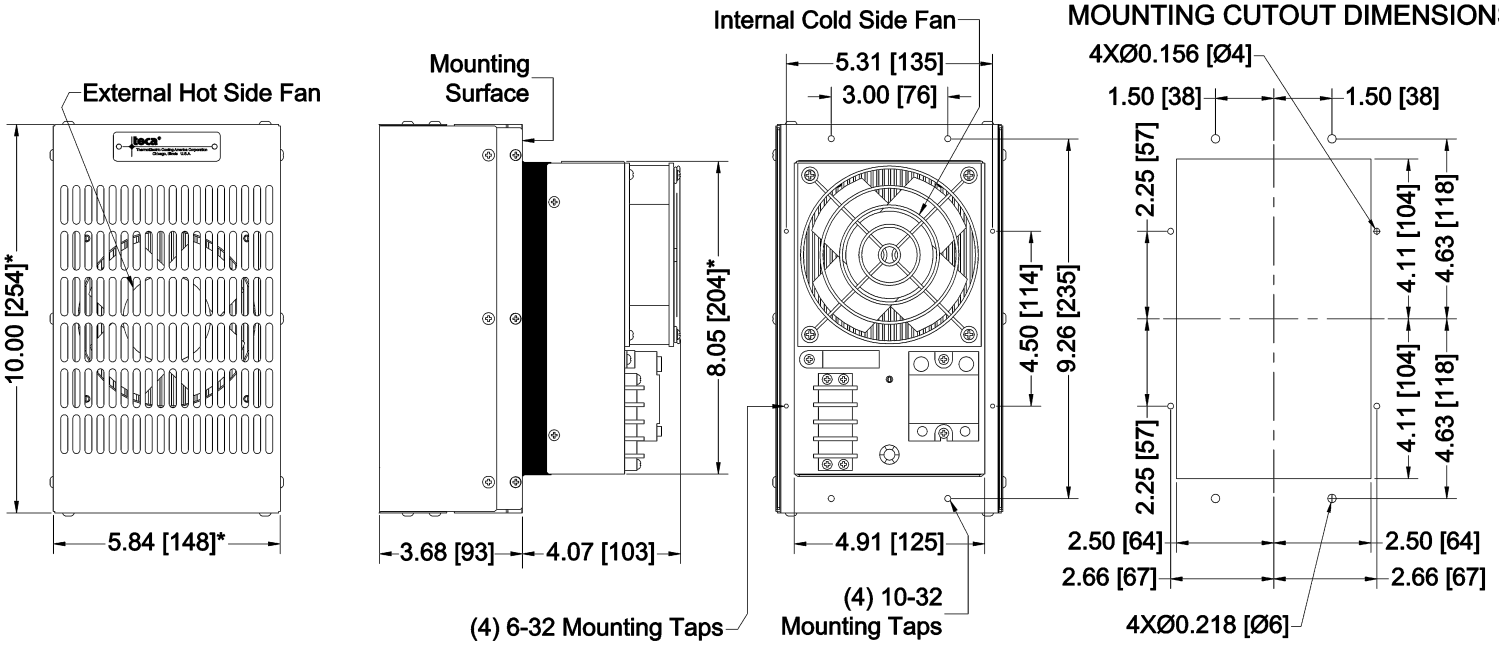


* Dimension does not include hardware and sealant.
Mounting hardware and gasket included but not shown.
Dimensions: Inches [Millimeters]

# AHP-401 | Air Conditioner Series

Air Cooled
Thru Mount
Nema-12

120/240 VAC

## FEATURES

- Compact (only 10" X 5.84" X 8.78")
- Weighs approximately 16 lbs. (7.3 kg)
- Mounts and operates in any orientation: horizontal, vertical, etc.
- Low vibration and noise
- No moving parts except fans
- Environmentally safe
- Dual voltage
- No compressor, fluorocarbons or filters
- Virtually maintenance-free operation
- Stainless steel exterior housing
- Efficient heat exchanger mode

## INCLUDES

- Integral power supply 120/240 VAC
- Gasket and mounting hardware
- Temperature Control

## OPTIONS

- Internal mounting
- Custom finishes or no cover

## SPECIFICATIONS

NEMA 12

| MODEL | PART NUMBER | NOTES | PERFORMANCE RATING BTU/HR | VOLTAGE VAC 50/60HZ | CURRENT AMPS. | WEIGHT LBS.(KG) | TEMP. CONTROL | OPERATING AMBIENT TEMPERATURE RANGE °C | OPERATING ENCLOSURE TEMPERATURE RANGE °C |
|---|---|---|---|---|---|---|---|---|---|
| AHP-401 | 0-F090-0-000 | Cool only | 359-445 | 120 | 1.3 | 16(7.3) | None | -10/+70 | -10/+60 |
| AHP-401 | 0-F0F0-0-000 | Cool only | 359-445 | 120 | 1.3 | 16(7.3) | 85°F (30°C) | -40/+70 | -10/+60 |
| AHP-401 | 0-F050-0-000 | Cool only | 359-445 | 120 | 1.3 | 16(7.3) | EXT* | -40/+70 | -10/+60 |
| AHP-401HC | 0-F0I0-1-000 | Heat/Cool | 359-445 | 120 | 1.3 | 16(7.3) | TC-7F | -40/+70 | -10/+60 |
| AHP-402 | 0-F092-0-000 | Cool only | 359-445 | 240 | 0.71 | 16(7.3) | None | -10/+70 | -10/+60 |
| AHP-402 | 0-F0F2-0-000 | Cool only | 359-445 | 240 | 0.71 | 16(7.3) | 85°F (30°C) | -40/+70 | -10/+60 |
| AHP-402 | 0-F052-0-000 | Cool only | 359-445 | 240 | 0.71 | 16(7.3) | EXT* | -40/+70 | -10/+60 |
| AHP-402HC | 0-F0I2-1-000 | Heat/Cool | 359-445 | 240 | 0.71 | 16(7.3) | TC-7F | -40/+70 | -10/+60 |

* Unit is set for 5-32 VDC external signal, relay(s) included

# AHP-401

**MOUNTING STYLE**

Thru Mount

**ENVIRONMENTS SERVED**

NEMA-12 IP 52

**RATING (TRADITIONAL)**

342 BTU/hr @ 0 °F ΔT

486 BTU/hr @ +20 °F ΔT

**RATING (DIN 3168)**

102 Watts L35 L35

50 Watts L35 L50

* See page 10

## PERFORMANCE CURVE

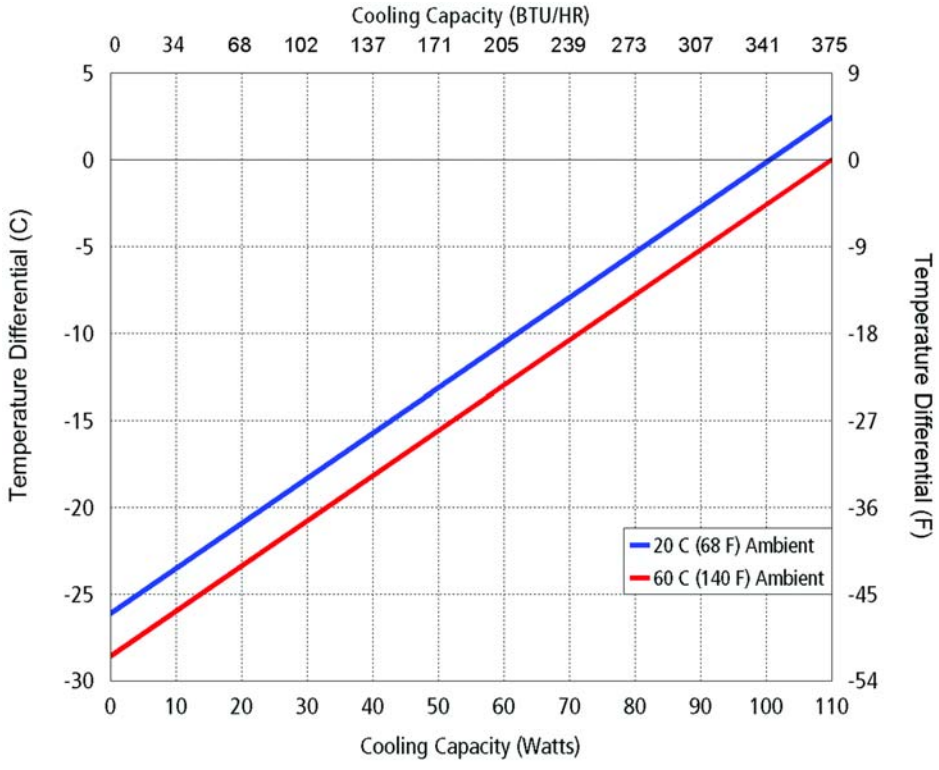


| Equation of Line: y=ΔT(°C) x=Capacity (Watts) | | |
|---|---|---|
| **Ambient Temp** | **20°C** | **60°C** |
| Enclosure Air | y=.26x-26.1 | y=.26x-28.6 |

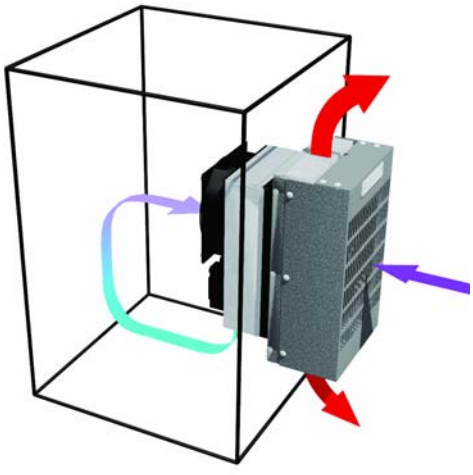

Air Flow Pattern

## DIMENSIONS

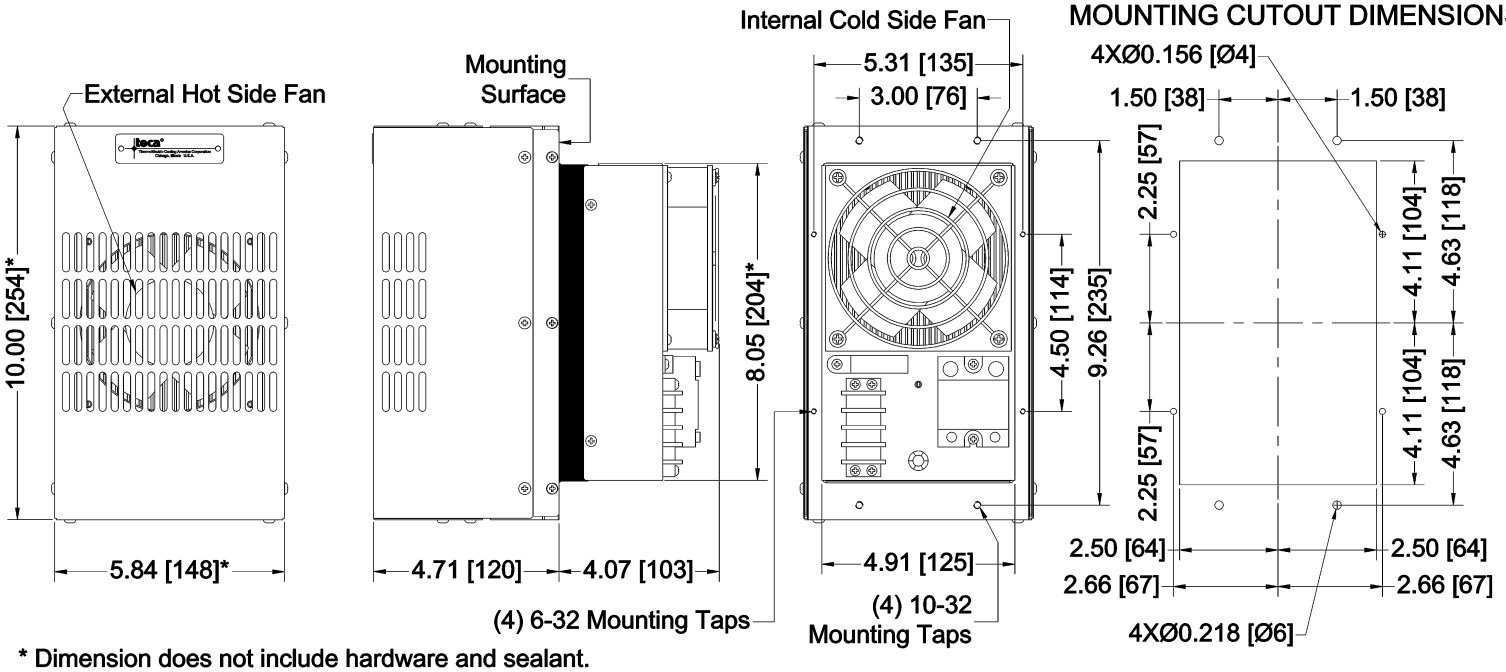


* Dimension does not include hardware and sealant.
Mounting hardware and gasket included but not shown.
Dimensions: Inches [Millimeters]

# AHP-400 | Air Conditioner Series

Air Cooled
Thru Mount
Nema-12, 4, 4X

24 VDC

## FEATURES

- Compact (only 10" X 5.84" X 7.75")
- Weighs only approximately 14 lbs. (6.4 kg)
- Mounts and operates in any orientation: horizontal, vertical, etc.
- Low vibration and noise
- No moving parts except fans
- Environmentally safe
- No compressor, fluorocarbons or filters
- Virtually maintenance-free operation
- Stainless steel exterior housing
- Efficient heat exchanger mode

## INCLUDES

- Gasket and mounting hardware
- Hook-up leads
- Mounting hardware
- Temperature Control

## OPTIONS

- Internal mounting
- Custom finishes or no cover
- Different temperature controls
- Consult factory for other voltages

## SPECIFICATIONS

| | MODEL | PART NUMBER | NOTES | COP @ 0 °C ΔT L35 L35 | VOLTAGE VDC | CURRENT AMPS. | TEMP. CONTROL | OPERATING AMBIENT TEMPERATURE RANGE °C | OPERATING ENCLOSURE TEMPERATURE RANGE °C |
|---|---|---|---|---|---|---|---|---|---|
| NEMA 12 | AHP-450 | 0-F0F5-0-000 | Cool Only | 1.12 | 24 | 2.3 | 85°F (30°C) | -10/+70 | -10/+60 |
| | AHP-450HC | 0-F095-1-000 | Heat/Cool † | 1.12 | 24 | 2.3 | None* | -10/+70 | -10/+60 |
| | AHP-450HC | 0-F0I5-1-000 | Heat/Cool | 1.12 | 24 | 2.3 | TC-7F | -10/+70 | -10/+60 |
| | AHP-470 | 0-F0F5-0-001 | Cool Only | 0.56 | 24 | 7 | 85°F (30°C) | -10/+70 | -10/+60 |
| | AHP-470HC | 0-F095-1-001 | Heat/Cool † | 0.56 | 24 | 7 | None* | -10/+70 | -10/+60 |
| | AHP-470HC | 0-F0I5-1-001 | Heat/Cool | 0.56 | 24 | 7 | TC-7F | -10/+70 | -10/+60 |
| NEMA 4 | AHP-450XE | 0-F0F5-4-000 | Cool Only | 1.12 | 24 | 2.3 | 85°F (30°C) | -20/+70 | -10/+60 |
| | AHP-450XEHC | 0-F095-5-000 | Heat/Cool † | 1.12 | 24 | 2.3 | None* | -20/+70 | -10/+60 |
| | AHP-450XEHC | 0-F0I5-5-000 | Heat/Cool | 1.12 | 24 | 2.3 | TC-7F | -20/+70 | -10/+60 |
| | AHP-470XE | 0-F0F5-4-001 | Cool Only | 0.56 | 24 | 7 | 85°F (30°C) | -20/+70 | -10/+60 |
| | AHP-470XEHC | 0-F095-5-001 | Heat/Cool † | 0.56 | 24 | 7 | None* | -20/+70 | -10/+60 |
| | AHP-470XEHC | 0-F0I5-5-001 | Heat/Cool | 0.56 | 24 | 7 | TC-7F | -20/+70 | -10/+60 |
| NEMA 4X | AHP-450X | 0-F0F5-2-000 | Cool Only | 1.12 | 24 | 2.3 | 85°F (30°C) | -40/+70 | -10/+60 |
| | AHP-450XHC | 0-F095-3-000 | Heat/Cool † | 1.12 | 24 | 2.3 | None* | -40/+70 | -10/+60 |
| | AHP-450XHC | 0-F0I5-3-000 | Heat/Cool | 1.12 | 24 | 2.3 | TC-7F | -40/+70 | -10/+60 |
| | AHP-470X | 0-F0F5-2-001 | Cool Only | 0.56 | 24 | 7 | 85°F (30°C) | -40/+70 | -10/+60 |
| | AHP-470XHC | 0-F095-3-001 | Heat/Cool † | 0.56 | 24 | 7 | None* | -40/+70 | -10/+60 |
| | AHP-470XHC | 0-F0I5-3-001 | Heat/Cool | 0.56 | 24 | 7 | TC-7F | -40/+70 | -10/+60 |

* For controller options contact TECA

† Heating function via reverse polarity (controller dependent)

# AHP-400

## PERFORMANCE CURVE

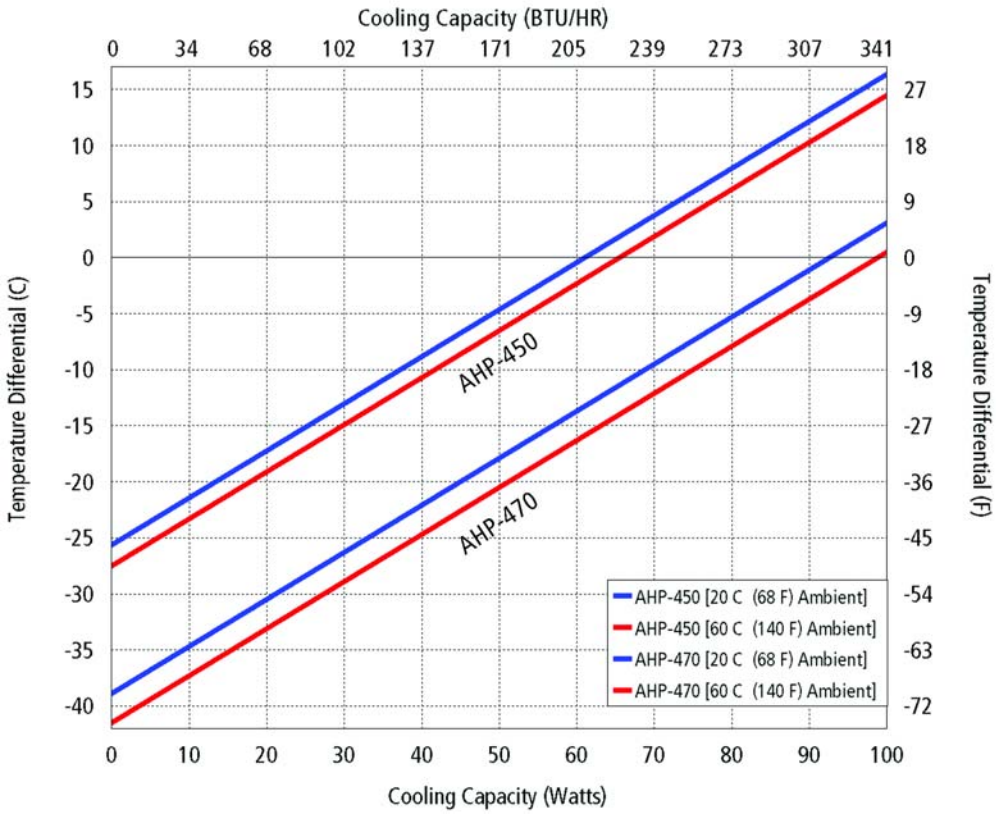


| Equation of Line: y=ΔT(°C) x=Capacity (Watts) | | |
|---|---|---|
| **Ambient Temp** | **20°C** | **60°C** |
| AHP-450 | y=.42x-25.6 | y=.42x-27.5 |
| AHP-470 | y=.42x-38.9 | y=.42x-41.5 |

**MOUNTING STYLE**

Thru Mount

**ENVIRONMENTS SERVED**

NEMA-12 IP 52

NEMA-4,4X IP 56

**RATING (TRADITIONAL)**

AHP-450 207 BTU/hr @ 0 °F ΔT

297 BTU/hr @ +20 °F ΔT

AHP-470 315 BTU/hr @ 0 °F ΔT

405 BTU/hr @ +20 °F ΔT

**RATING (DIN 3168)**

AHP-450 62 Watts L35 L35

28 Watts L35 L50

AHP-470 95 Watts L35 L35

62 Watts L35 L50

* See page 10

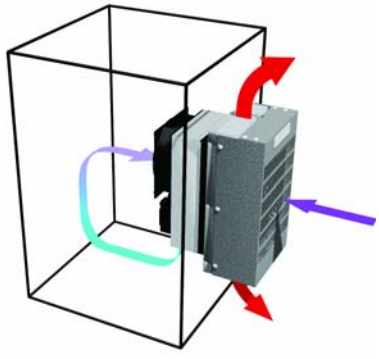

Air Flow Pattern

## DIMENSIONS

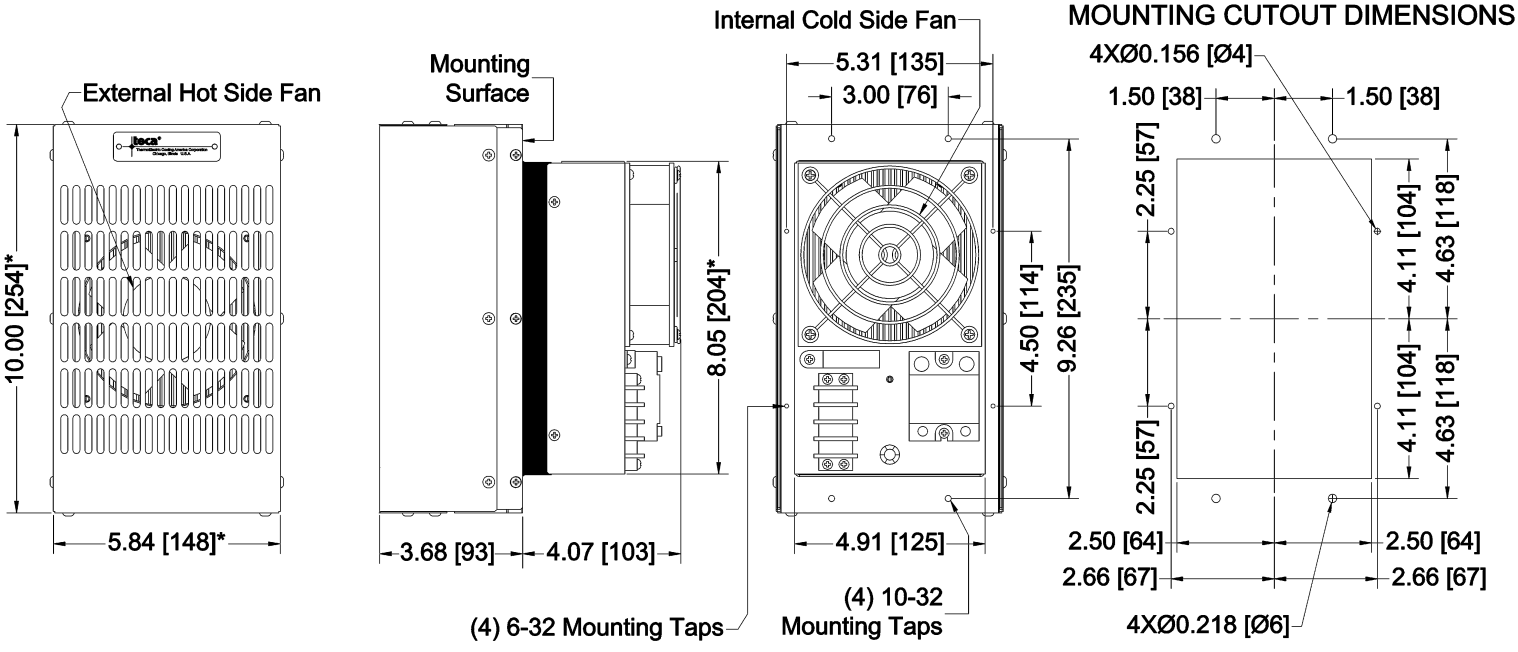


* Dimension does not include hardware and sealant.
Mounting hardware and gasket included but not shown.
Dimensions: Inches [Millimeters]

# AHP-301FF | Air Conditioner

Air Cooled
Thru Mount
NEMA-12

120/240 VAC input

## FEATURES

- Compact (only 10"L X 5.52"W X 7.83"D)
- Weighs only 12 lbs. (5.4 kg)
- Ambient range -10°C to +70°C
- Mounts and operates in any orientation: horizontal, vertical, etc.
- Low vibration and noise
- No moving parts except fans
- Environmentally safe
- Dual voltage
- No compressor, fluorocarbons or filters
- Virtually maintenance-free operation
- Stainless steel exterior housing

## INCLUDES

- Integral power supply 120/240 VAC
- Gasket and mounting hardware

## OPTIONS

- Other temperature settings for single set point controls
- Custom finishes

## SPECIFICATIONS

| MODEL | PART NUMBER | NOTES | PERFORMANCE RATING BTU/HR | VOLTAGE VAC 50/60HZ | CURRENT AMPS. | TEMP. CONTROL | OPERATING AMBIENT TEMPERATURE RANGE °C | OPERATING ENCLOSURE TEMPERATURE RANGE °C |
|---|---|---|---|---|---|---|---|---|
| AHP-301FF | 0-7091-0-000 | Cool only | 160-200 | 120/240 | 1.4/.70 | None | -10/+60 | -10/+60 |
| AHP-301FF | 0-7081-0-000 | Cool only | 160-200 | 120/240 | 1.4/.70 | TC-6F | -10/+60 | -10/+60 |
| AHP-301FFHC | 0-7031-1-000 | Heat/Cool | 160-200 | 120/240 | 1.4/.70 | TC-3F | -10/+60 | -10/+60 |
| AHP-301FF | 0-7051-0-000 | Cool only | 160-200 | 120/240 | 1.4/.70 | EXT* | -10/+60 | -10/+60 |
| AHP-301FFHC | 0-7051-1-000 | Heat/Cool | 160-200 | 120/240 | 1.4/.70 | EXT* | -10/+60 | -10/+60 |
| AHP-301FF/85 | 0-70F1-0-000 | Cool only | 160-200 | 120/240 | 1.4/.70 | 85°F (30°C) | -10/+60 | -10/+60 |

NEMA 12

* Unit is set for 5-32 VDC external signal, relay(s) included

# AHP-301FF

**MOUNTING STYLE**

Thru Mount

**ENVIRONMENTS SERVED**

NEMA-12 IP 52

**RATING (TRADITIONAL)**

180 BTU/hr @ 0 °F ΔT

220 BTU/hr @ +20 °F ΔT *

**RATING (DIN 3168)**

52 Watts L35 L35

36 Watts L35 L50

* See page 10

## PERFORMANCE CURVE

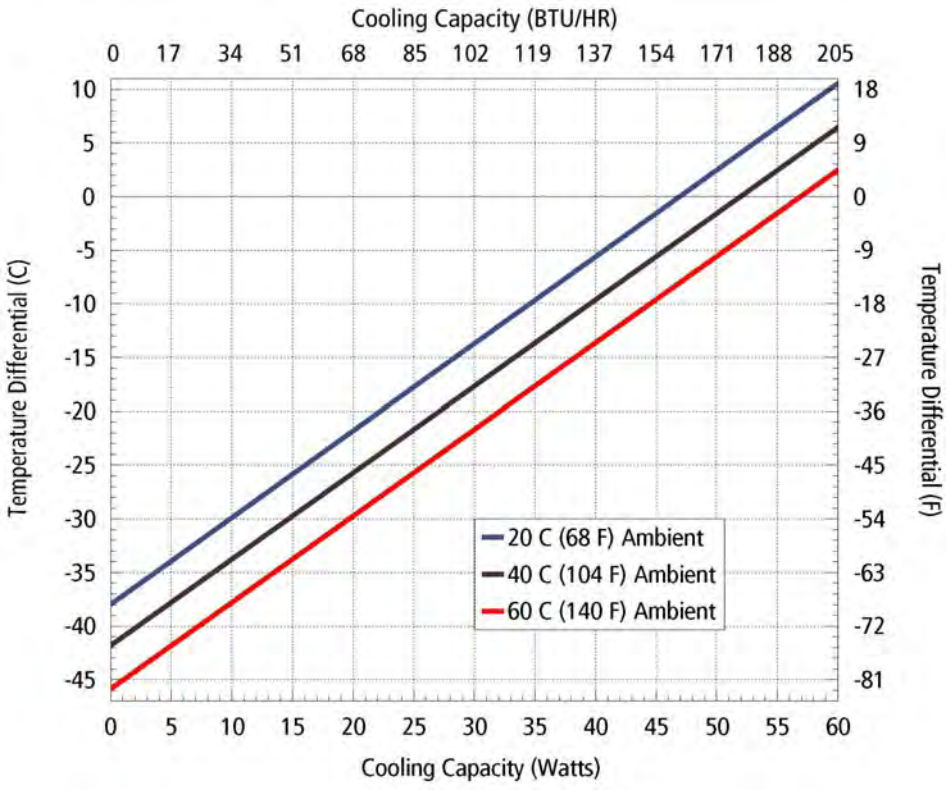


| Equation of line: y=ΔT(°C) x=Capacity (Watts) | | | |
|---|---|---|---|
| **Ambient Temp** | **20°C** | **40°C** | **60°C** |
| Enclosure Air | y=.81x-38.0 | y=.81x-42.0 | y=.81x-46.0 |
| Cold Sink | y=.62x-38.0 | y=.62x-42.0 | y=.62x-46.0 |

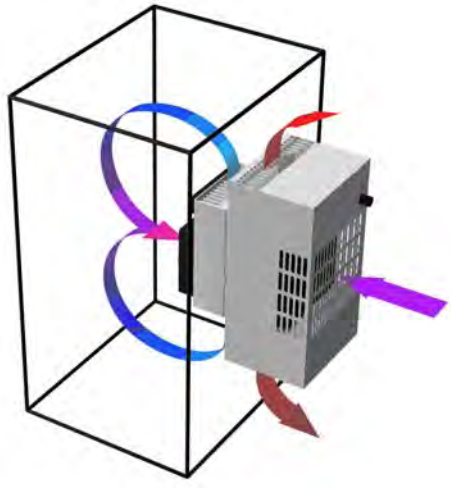

Air Flow Pattern

## DIMENSIONS

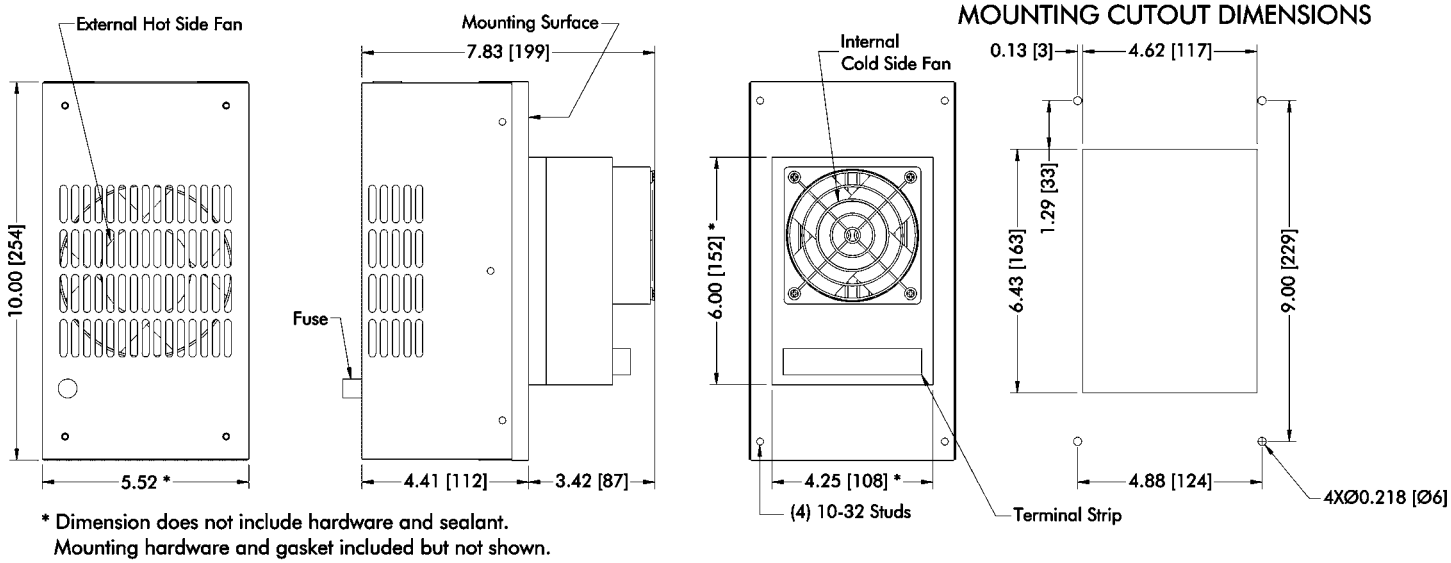


* Dimension does not include hardware and sealant.
Mounting hardware and gasket included but not shown.
Dimensions: Inches [Millimeters]

# AHP-300FF | Air Conditioner

Air Cooled
Thru Mount
NEMA-12, 4, and 4x

General Purpose VDC Input

## FEATURES

- Compact (only 10"L X 5.37"W X 6.45"D)
- Weighs only 7.5 lbs. (3.4 kg)
- Ambient range -10ºC to +70ºC
- No compressor, fluorocarbons or filters
- Virtually maintenance-free operation
- Mounts in any orientation
- X versions use mil-grade hot side fan
- XE versions use industrial grade high quality sealed fans

## INCLUDES

- Gasket and mounting hardware
- Hook-up leads
- Mounting hardware

## OPTIONS

- Temperature Control TC-6F DC for cool only
- Temperature Control TC-3F DC for heat/cool
- Temperature Control TC-3500 for heat/cool reverse polarity
- Adaptable for TC-3300 and TC-4300 control
- Cover for hot side

## SPECIFICATIONS

| | MODEL | PART NUMBER | NOTES | COP @ 0 °C ΔT L35 L35 | VOLTAGE VDC | CURRENT AMPS. | TEMP. CONTROL | OPERATING AMBIENT TMPERATURE RANGE °C | OPERATING ENCLOSURE TEMPERATURE RANGE °C |
|---|---|---|---|---|---|---|---|---|---|
| NEMA 12 | AHP-300FF | 0-7097-0-000 | Cool only | 0.42 | 12/24/48 | 12/6/3 | None | -10/+70 | -10/+60 |
| | AHP-300FFHC | 0-7094-1-000 | Heat/Cool | 0.42 | 12 | 12 | None | -10/+70 | -10/+60 |
| | AHP-300FFHC | 0-7095-1-000 | Heat/Cool | 0.42 | 24 | 6 | None | -10/+70 | -10/+60 |
| | AHP-300FFHC | 0-7097-1-001 | Heat/Cool rev. pol. | 0.42 | 12/24/48 | 12/6/3 | None* | -10/+70 | -10/+60 |
| NEMA 4 | AHP-300XE | 0-7097-4-000 | Cool only | 0.42 | 12/24/48 | 12/6/3 | None | -20/+70 | -10/+60 |
| | AHP-300XEHC | 0-7095-5-000 | Heat/Cool | 0.42 | 24 | 6 | None | -20/+70 | -10/+60 |
| | AHP-300XEHC | 0-7097-5-001 | Heat/Cool rev. pol. | 0.42 | 12/24/48 | 12/6/3 | None* | -20/+70 | -10/+60 |
| N4 MA 4X | AHP-300X | 0-7097-2-000 | Cool only | 0.42 | 12/24/48 | 12/6/3 | None | -40/+70 | -10/+60 |
| | AHP-300XHC | 0-7094-3-000 | Heat/Cool | 0.42 | 12 | 12 | None | -40/+70 | -10/+60 |
| | AHP-300XHC | 0-7095-3-000 | Heat/Cool | 0.42 | 24 | 6 | None | -40/+70 | -10/+60 |
| | AHP-300XHC | 0-7097-3-001 | Heat/Cool rev. pol. | 0.42 | 12/24/48 | 12/6/3 | None* | -40/+70 | -10/+60 |

* Reverse polarity unit can be used with external TC-3500 controller operating at 24VDC only see P. 136

See also , "Power Supplies", P. 141

# AHP-300FF

## PERFORMANCE CURVE

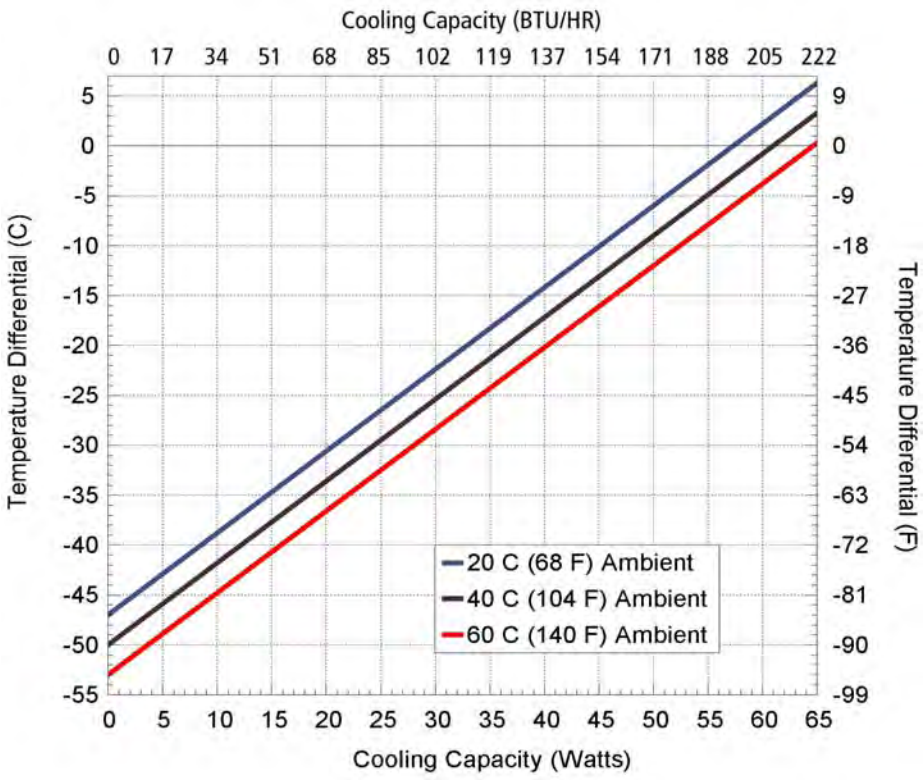


| y=ΔT(°C) x=Capacity (Watts) | | | |
|---|---|---|---|
| **Ambient Temp** | **20°C** | **40°C** | **60°C** |
| Enclosure Air | y=.82x-47.0 | y=.82x-50.0 | y=.82x-53.0 |
| Cold Sink | y=.64x-47.0 | y=.64x-50.0 | y=.64x-53.0 |

**MOUNTING STYLE**

Thru Mount

**ENVIRONMENTS SERVED**

NEMA-12 IP 52

NEMA-4,4X IP 56

**RATING (TRADITIONAL)**

210 BTU/hr @ 0 °F ΔT

250 BTU/hr @ +20 °F ΔT *

**RATING (DIN 3168)**

61 Watts L35 L35

44 Watts L35 L50

* See page 10

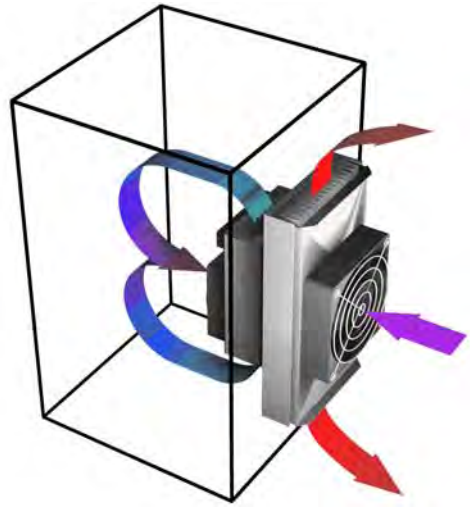

Air Flow Pattern

## DIMENSIONS

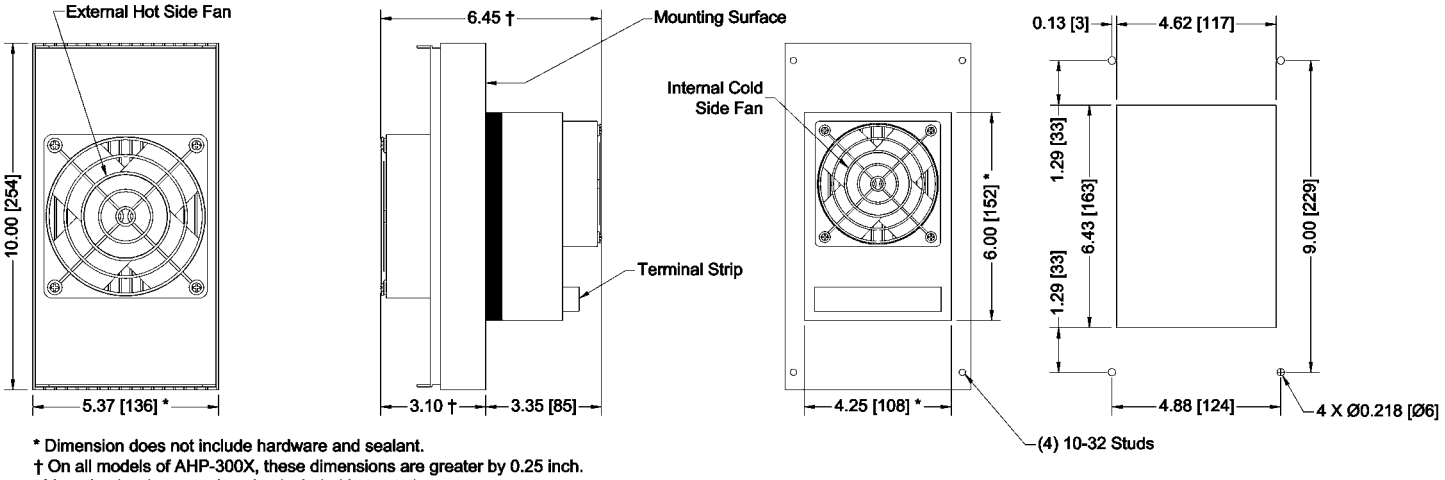


* Dimension does not include hardware and sealant.
† On all models of AHP-300X, these dimensions are greater by 0.25 inch.
Mounting hardware and gasket included but not shown.
Dimensions: Inches [Millimeters]

# AHP-150FF | Air Conditioner

Air Cooled
Thru Mount
NEMA-12
NEMA-4

General Purpose VDC Input

## FEATURES

- Compact (only 7"L X 5"W X 6.02"D)
- Weighs only 3.2 lbs. (1.5 kg)
- Ambient range -10°C to +70°C
- No compressor, fluorocarbons or filters
- Virtually maintenance-free operation
- Mounts in any orientation

## INCLUDES

- Mounting gasket
- Hook-up leads
- Mounting Hardware

## OPTIONS

- Temperature control TC-6F DC for cool only
- Temperature control TC-3F DC for heat/cool
- Temperature Control TC-3500 for heat/cool reverse polarity
- Adaptable for TC-3300 and TC-4300 controller

## SPECIFICATIONS

| | MODEL | PART NUMBER | NOTES | COP @ 0 °C ΔT L35 L35 | VOLTAGE VDC | CURRENT AMPS. | TEMP. CONTROL | OPERATING AMBIENT TEMPERATURE RANGE °C | OPERATING ENCLOSURE TEMPERATURE RANGE °C |
|---|---|---|---|---|---|---|---|---|---|
| NEMA 12 | AHP-150FF | 0-8098-0-000 | Cool only | 0.40 | 12/24 | 6/3 | none | -10/+70 | -10/+60 |
| | AHP-150FFHC | 0-8094-1-000 | Heat/Cool | 0.40 | 12 | 6 | none | -10/+70 | -10/+60 |
| | AHP-150FFHC | 0-8095-1-000 | Heat/Cool | 0.40 | 24 | 3 | none | -10/+70 | -10/+60 |
| | AHP-150FFHC | 0-8098-1-001 | Heat/Cool rev. pol. | 0.40 | 12/24 | 6/3 | none* | -10/+70 | -10/+60 |
| NEMA 4 | AHP-150XE | 0-8094-4-000 | Cool only | 0.40 | 12 | 6 | none | -20/+70 | -10/+60 |
| | AHP-150XEHC | 0-8094-5-000 | Heat/Cool | 0.40 | 12 | 6 | none | -20/+70 | -10/+60 |
| | AHP-150XEHC | 0-8094-5-001 | Heat/Cool rev. pol. | 0.40 | 12 | 6 | none* | -20/+70 | -10/+60 |

* Reverse polarity unit can be used with external TC-3500 controller see P. 136

See also , "Power Supplies", P. 141

# AHP-150FF

## PERFORMANCE CURVE

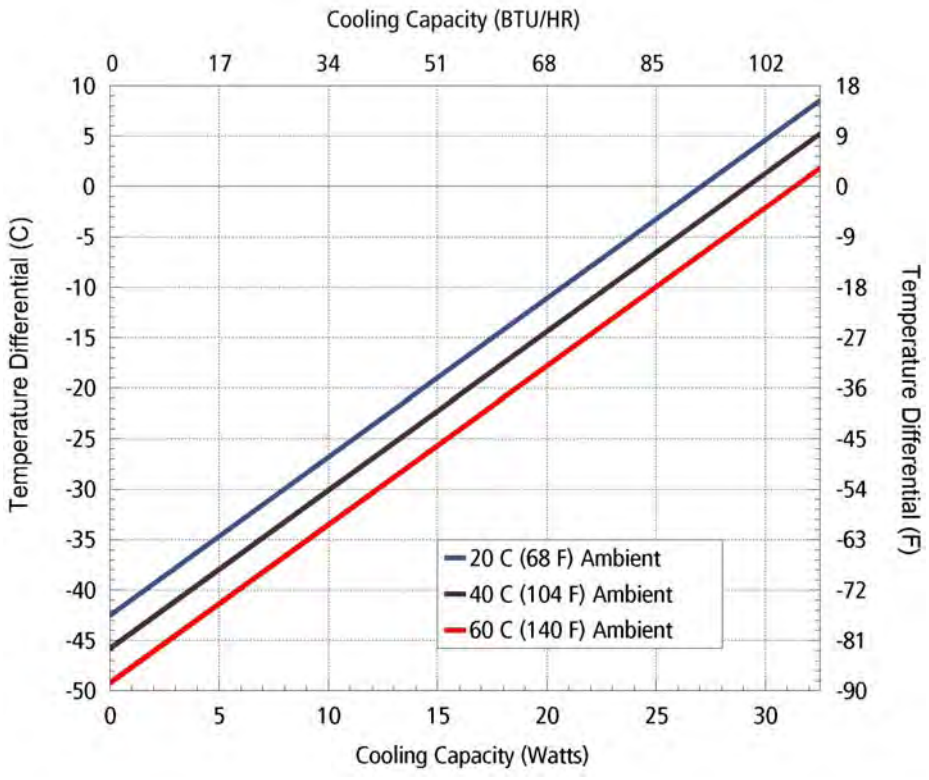


| Equation of line: y=ΔT(°C) x=Capacity (Watts) | | | |
|---|---|---|---|
| **Ambient Temp** | **20°C** | **40°C** | **60°C** |
| Enclosure Air | y=1.57x-42.5 | y=1.57x-45.8 | y=1.57x-49.2 |
| Cold Sink | y=1.24x-42.5 | y=1.24x-45.8 | y=1.24x-49.2 |

**MOUNTING STYLE**

Thru Mount

**ENVIRONMENTS SERVED**

NEMA-12 IP 52

NEMA-4 IP 54

**RATING (TRADITIONAL)**

100 BTU/hr @ 0 °F ΔT

123 BTU/hr @ +20 °F ΔT *

**RATING (DIN 3168)**

29 Watts L35 L35

21 Watts L35 L50

* See page 10

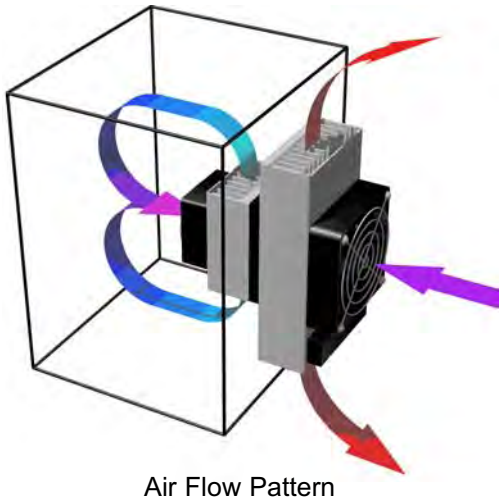

Air Flow Pattern

## DIMENSIONS

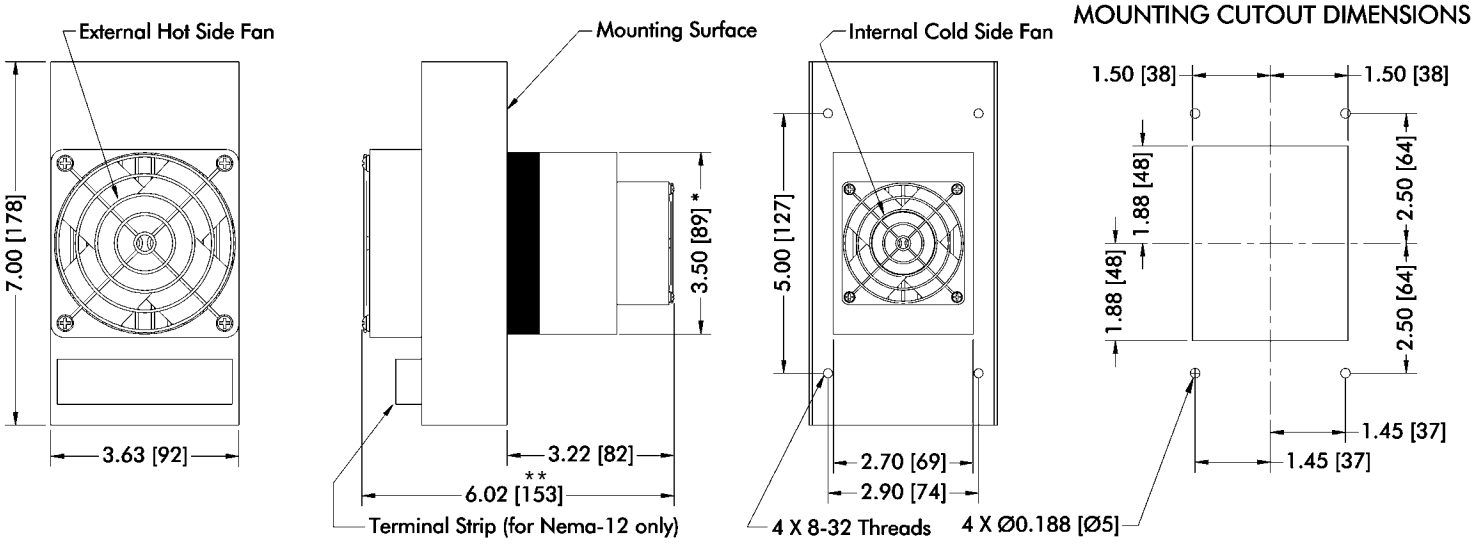


* Dimension does not include hardware and sealant.
Hardware and gasket included but not shown.
Dimensions: Inches [Millimeters]

# FHP-2850 | Air Conditioner

Air Cooled
Flush Mounted
NEMA-12

120 VAC, 240 VAC Input

## FEATURES

- Externally mounted, no intrusion
- Ambient range -10ºC to +70ºC
- No compressor, fluorocarbons or filters
- Virtually maintenance-free operation
- Stainless steel exterior housing
- Mounts in any orientation (condensate removal may not work properly in all orientations)
- No moving parts except fans
- Environmentally safe

## INCLUDES

- Integral power supply
- Condensate removal system
- TC-6F temperature controller
- Mounting hardware
- Gasket for NEMA-12 seal

## APPLICATIONS

This unit has been employed for larger cooling loads such as overhead cranes in rolling mills and other similar industrial applications.

## SPECIFICATIONS

NEMA 12

| MODEL | PART NUMBER | NOTES | PERFORMANCE RATING BTU/HR | VOLTAGE VAC 50/60 HZ | CURRENT AMPS. | WEIGHT LBS. (kg) | TEMP. CONTROL | OPERATING AMBIENT TEMPERATURE RANGE °C | OPERATING ENCLOSURE TEMPERATURE RANGE °C |
|---|---|---|---|---|---|---|---|---|---|
| FHP-2850 | 7-D580-0-000 | Cool only | 1600-1800 | 120 | 12.5 | 68(31) | TC-6F | -15/+70 | -10/+60 |
| FHP-2850 | 7-D550-0-000 | Cool only | 1600-1800 | 120 | 12.5 | 68(31) | EXT* | -15/+70 | -10/+60 |
| FHP-2852 | 7-D582-0-000 | Cool only | 1600-1800 | 240 | 7.5 | 68(31) | TC-6F | -15/+70 | -10/+60 |
| FHP-2852 | 7-D552-0-000 | Cool only | 1600-1800 | 240 | 7.5 | 68(31) | EXT* | -15/+70 | -10/+60 |

* Unit is set for 5-32 VDC external signal, relay(s) included

# FHP-2850

**MOUNTING STYLE**

Flush Mounted

**ENVIRONMENTS SERVED**

NEMA-12 IP 52

**RATING (TRADITIONAL)**

1700 BTU/hr @ 0 °F ΔT

2200 BTU/hr @ +20 °F ΔT *

**RATING (DIN 3168)**

480 Watts L35 L35

320 Watts L35 L50

* See page 10

## PERFORMANCE CURVE

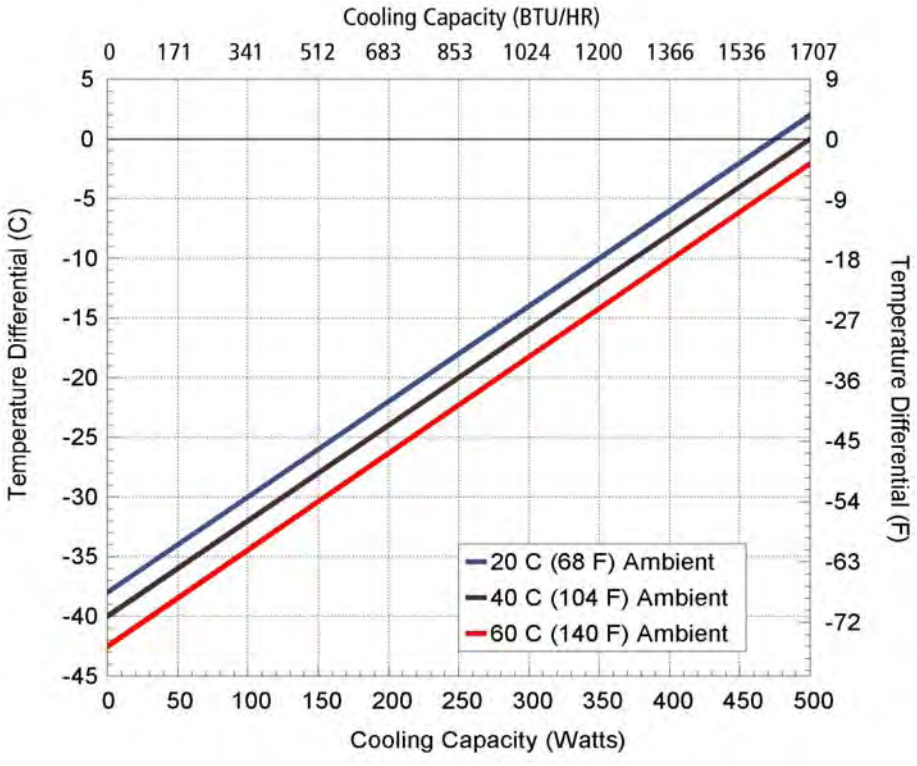


| Equation of line: y=ΔT(°C) x=Capacity (Watts) | | | |
|---|---|---|---|
| **Ambient Temp** | **20°C** | **40°C** | **60°C** |
| Enclosure Air | y=.08x-38.0 | y=.08x-40.0 | y=.08x-42.0 |
| Cold Sink | y=.05x-38.0 | y=.05x-40.0 | y=.05x-42.0 |

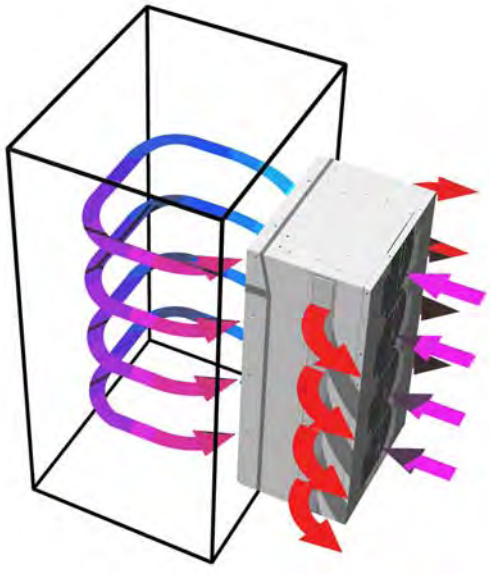

Air Flow Pattern

## DIMENSIONS

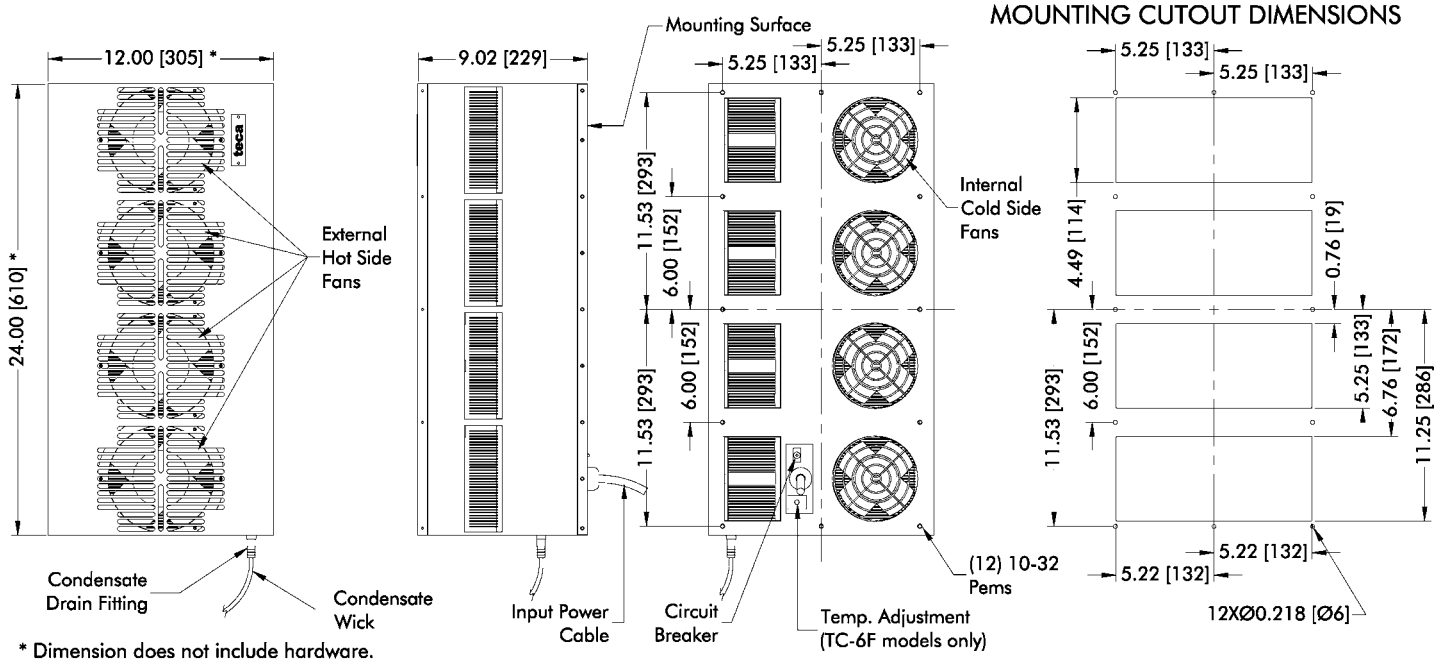


* Dimension does not include hardware.
Mounting hardware and gasket included but not shown.
Dimensions: inches [Millimeters]

# FHP-1501 | Air Conditioner

Air Cooled
Flush Mounted
NEMA-12, NEMA-4

120/240 VAC Input

## FEATURES

- Externally mounted (no intrusion)
- Mounts in multi-unit array for incremental capacity
- Compact (only 15"L X 12"W X 9"D)
- Weighs only 55 lbs. (25 kg)
- Ambient range -10°C to +70°C
- No compressor, fluorocarbons or filters
- Virtually maintenance-free operation
- Stainless steel exterior housing
- Dual voltage (120/240 VAC)
- No moving parts except fans
- Environmetally safe
- Mounts and operates in any orientation (condensate removal system may not work properly in all orientations)

## INCLUDES

- Integral power supply
- Condensate removal system
- Adjustable temperature control
- Mounting gasket for NEMA-12, NEMA-4 seal
- Mounting hardware

## INCLUDES

- Other temperature settings for single set point controls
- Custom finishes

## SPECIFICATIONS

| | MODEL | PART NUMBER | NOTES | PERFORMANCE RATING BTU/HR | VOLTAGE VAC 50/60 HZ | CURRENT AMPS. | TEMP. CONTROL | OPERATING AMBIENT TEMPERATURE RANGE °C | OPERATING ENCLOSURE TEMPERATURE RANGE °C | AGENCY APPROVALS |
|---|---|---|---|---|---|---|---|---|---|---|
| NEMA 12 | FHP-1501 | 7-2181-0-000 | Cool only | 1000-1100 | 120/240 | 8.0/5.5 | TC-6F† | -40/+65 | -10/+60 | UL1995/CSA22.2 |
| | FHP-1501 | 7-2151-0-000 | Cool only | 1000-1100 | 120/240 | 8.0/5.5 | EXT* | -40/+65 | -10/+60 | UL1995/CSA22.2 |
| | FHP-1501 | 7-21F1-0-000 | Cool only | 1000-1100 | 120/240 | 8.0/5.5 | 85°F (30°C) | -40/+65 | -10/+60 | UL1995/CSA22.2 |
| | FHP-1501HC | 7-2131-1-000 | Heat/Cool | 1000-1100 | 120/240 | 8.0/5.5 | TC-3F | -40/+65 | -10/+60 | UL1995/CSA22.2 |
| | FHP-1501HC | 7-2151-1-000 | Heat/Cool | 1000-1100 | 120/240 | 8.0/5.5 | EXT* | -40/+65 | -10/+60 | UL1995/CSA22.2 |
| NEMA 4 | FHP-1501XE | 7-2181-4-000 | Cool only | 1000-1100 | 120/240 | 8.0/5.5 | TC-6F† | -40/+60 | -10/+60 | UL1995/CSA22.2 |
| | FHP-1501XE | 7-2151-4-000 | Cool only | 1000-1100 | 120/240 | 8.0/5.5 | EXT* | -40/+60 | -10/+60 | UL1995/CSA22.2 |
| | FHP-1501XE | 7-21F1-4-000 | Cool only | 1000-1100 | 120/240 | 8.0/5.5 | 85°F (30°C) | -40/+65 | -10/+60 | UL1995/CSA22.2 |
| | FHP-1501XEHC | 7-2131-5-000 | Heat/Cool | 1000-1100 | 120/240 | 8.0/5.5 | TC-3F | -40/+65 | -10/+60 | UL1995/CSA22.2 |
| | FHP-1501XEHC | 7-2151-5-000 | Heat/Cool | 1000-1100 | 120/240 | 8.0/5.5 | EXT* | -40/+65 | -10/+60 | UL1995/CSA22.2 |

* Unit is set for 5-32 VDC external signal, relay(s) include

† Unit evaluated by ETL

EN 60335-1
EN60335-2-40

# FHP-1501

## PERFORMANCE CURVE

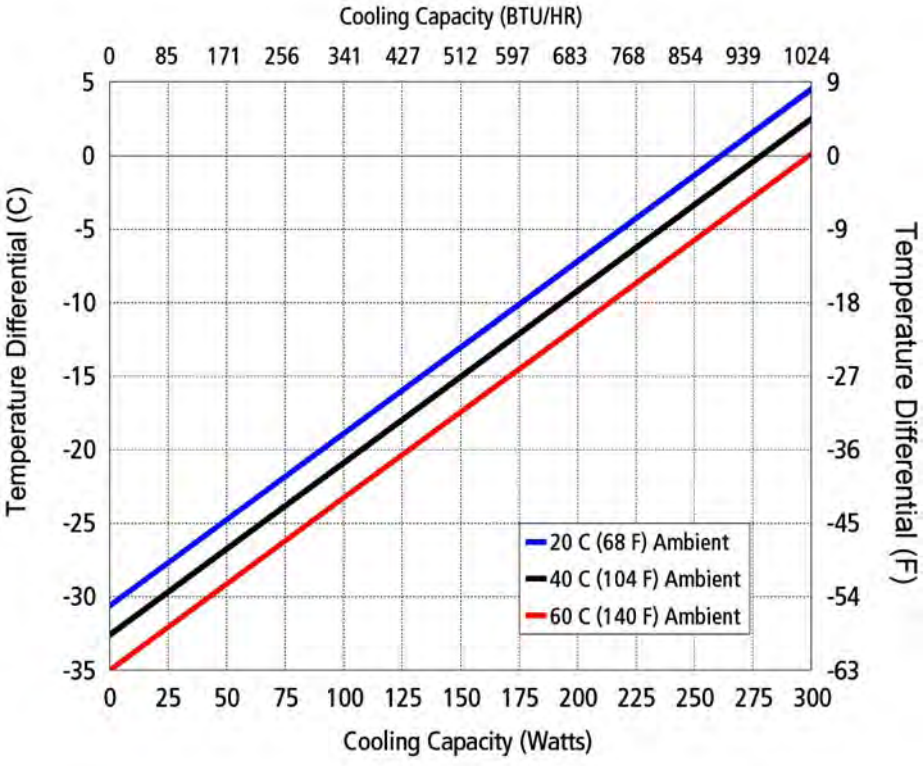


| Equation of line: y=ΔT(°C) x=Capacity (Watts) | | | |
|---|---|---|---|
| **Ambient Temp** | **20°C** | **40°C** | **60°C** |
| Enclosure Air | y=.117x-30.6 | y=.117x-32.6 | y=.117x-35.0 |
| Cold Sink | y=.093x-30.6 | y=.093x-32.6 | y=.093x-35.0 |

**MOUNTING STYLE**

Flush Mounted

**ENVIRONMENTS SERVED**

NEMA-12 IP 52

NEMA-4 IP 56

**RATING (TRADITIONAL)**

950 BTU/hr @ 0 °F ΔT

1270 BTU/hr @ +20 °F ΔT *

**RATING (DIN 3168)**

278 Watts L35 L35

162 Watts L35 L50

* See page 10

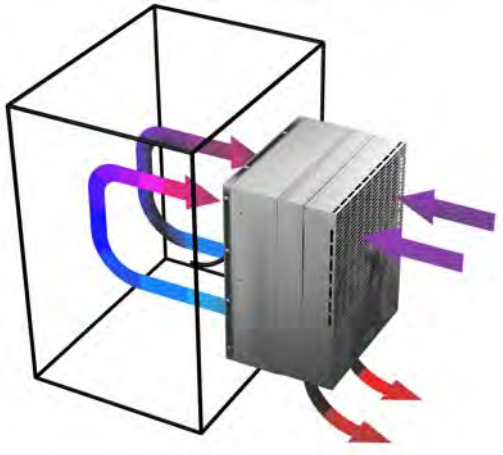

Air Flow Pattern

## DIMENSIONS

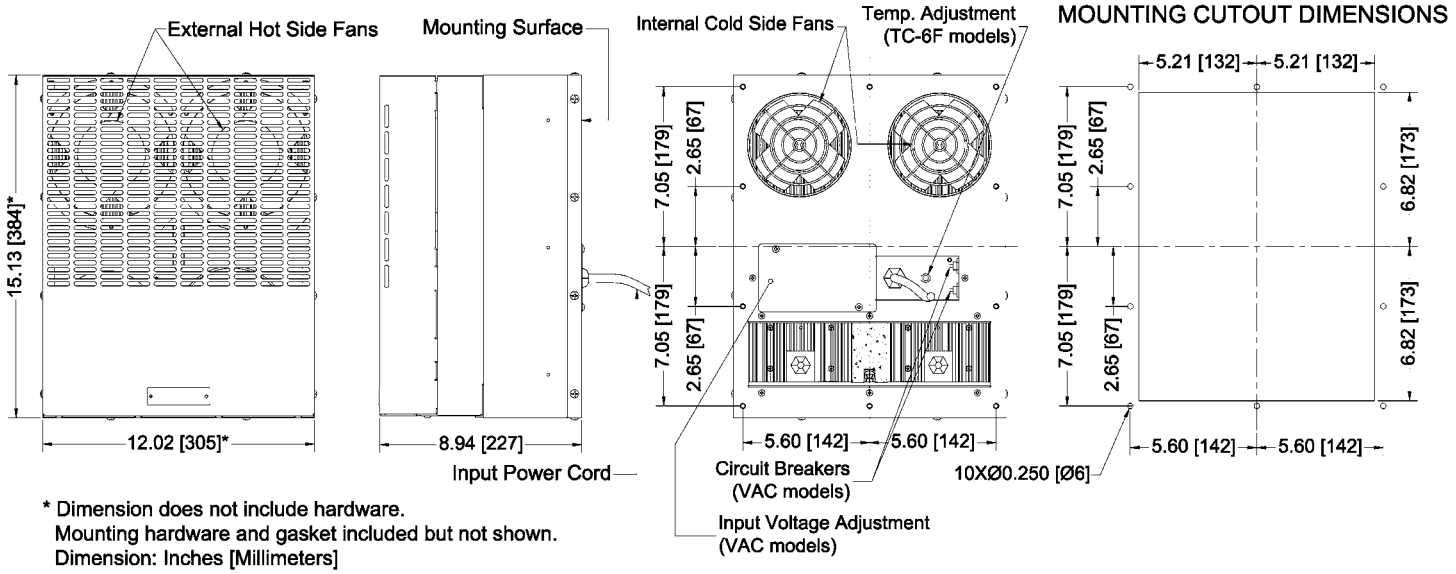


* Dimension does not include hardware.
Mounting hardware and gasket included but not shown.
Dimension: Inches [Millimeters]

# FHP-1501 Air Conditioner

Air Cooled
Flush Mounted
NEMA-12, NEMA-4

24 VDC Input

## FEATURES

- Externally mounted (no intrusion)
- Mounts in multi-unit array for incremental capacity
- Compact (only 15"L X 12"W X 9"D)
- Weighs only 55 lbs. (25 kg)
- Ambient range -10ºC to +70ºC
- No compressor, fluorocarbons or filters
- Virtually maintenance-free operation
- Stainless steel exterior housing
- No moving parts except fans
- Environmetally safe
- Mounts and operates in any orientation (condensate removal system may not work properly in all orientations)

## INCLUDES

- Condensate removal system
- Adjustable temperature control
- Mounting gasket for NEMA-12, NEMA-4 seal
- Mounting hardware

## OPTIONS

- 250 VDC configuration for crane applications available
- Other voltage configuration available (contact TECA)
- Other temperature settings fro single set point controls
- Custom finishes

## SPECIFICATIONS

| | MODEL | PART NUMBER | NOTES | COP @ 0 °C ΔT L35 L35 | VOLTAGE VDC | CURRENT AMPS. | TEMP. CONTROL | OPERATING AMBIENT TEMPERATURE RANGE °C | OPERATING ENCLOSURE TEMPERATURE RANGE °C |
|---|---|---|---|---|---|---|---|---|---|
| NEMA 12 | FHP-1501 | 7-2185-0-000 | Cool only | 0.64 | 24(16-28) | 18 | TC-6F | -40/+70 | -10/+60 |
| | FHP-1501 | 7-2155-0-000 | Cool only | 0.64 | 24(16-28) | 18 | EXT* | -40/+70 | -10/+60 |
| | FHP-1501 | 7-21F5-0-000 | Cool only | 0.64 | 24(16-28) | 18 | 85°F (30°C) | -40/+70 | -10/+60 |
| | FHP-1501HC | 7-2135-1-000 | Heat/Cool | 0.64 | 24(16-28) | 18 | TC-3F | -40/+70 | -10/+60 |
| | FHP-1501HC | 7-21I5-1-000 | Heat/Cool | 0.64 | 24(16-28) | 18 | TC-7F | -40/+70 | -10/+60 |
| | FHP-1501HC | 7-2155-1-000 | Heat/Cool | 0.64 | 24(16-28) | 18 | EXT† | -40/+70 | -10/+60 |
| | FHP-1501HC | 7-21H5-1-000 | Heat/Cool | 0.64 | 24(16-28) | 18 | TC-4600 | -40/+70 | -10/+60 |
| NEMA 4 | FHP-1501XE | 7-2185-4-000 | Cool only | 0.64 | 24(16-28) | 18 | TC-6F | -40/+60 | -10/+60 |
| | FHP-1501XE | 7-2155-4-000 | Cool only | 0.64 | 24(16-28) | 18 | EXT* | -40/+60 | -10/+60 |
| | FHP-1501XE | 7-21F5-4-000 | Cool only | 0.64 | 24(16-28) | 18 | 85°F (30°C) | -40/+70 | -10/+60 |
| | FHP-1501XEHC | 7-2135-5-000 | Heat/Cool | 0.64 | 24(16-28) | 18 | TC-3F | -40/+70 | -10/+60 |
| | FHP-1501XEHC | 7-21I5-5-000 | Heat/Cool | 0.64 | 24(16-28) | 18 | TC-7F | -40/+70 | -10/+60 |
| | FHP-1501XEHC | 7-2155-5-000 | Heat/Cool | 0.64 | 24(16-28) | 18 | EXT† | -40/+70 | -10/+60 |
| | FHP-1501XEHC | 7-21H5-5-000 | Heat/Cool | 0.64 | 24(16-28) | 18 | TC-4600 | -40/+70 | -10/+60 |

* Unit is set for 5-32 VDC external signal, relay(s) included
† Unit is set for 5-32 VDC external signal, H-Bridge relay(s) included

# FHP-1501

## PERFORMANCE CURVE

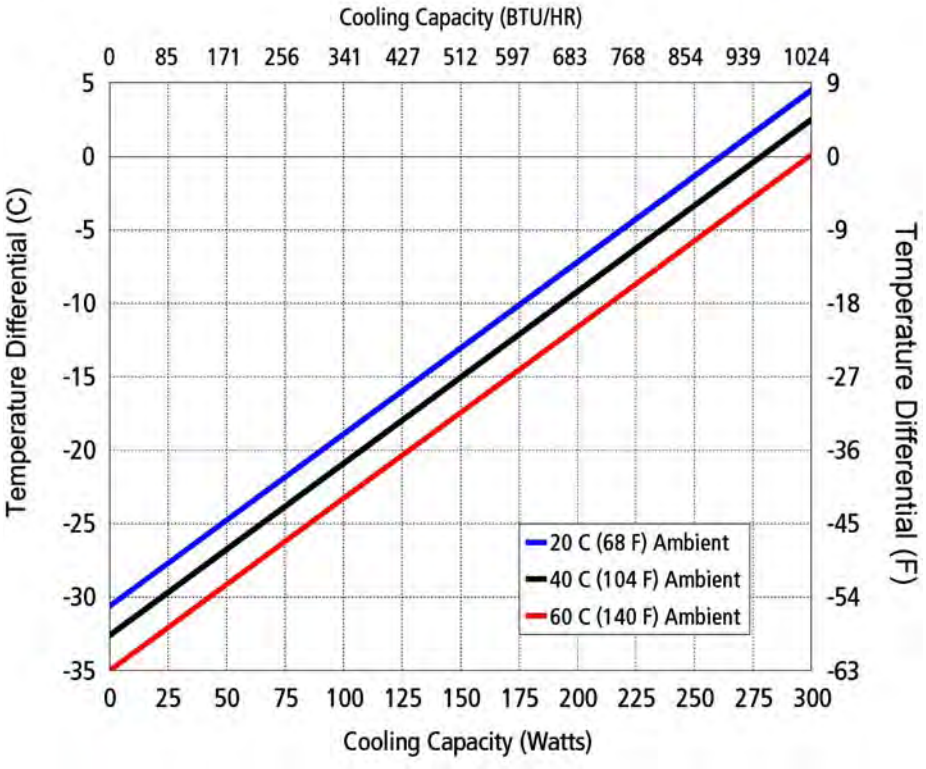


| Equation of line: y=ΔT(°C) x=Capacity (Watts) | | | |
|---|---|---|---|
| **Ambient Temp** | **20°C** | **40°C** | **60°C** |
| Enclosure Air | y=.117x-30.6 | y=.117x-32.6 | y=.117x-35.0 |
| Cold Sink | y=.093x-30.6 | y=.093x-32.6 | y=.093x-35.0 |

**MOUNTING STYLE**

Flush Mounted

**ENVIRONMENTS SERVED**

NEMA-12 IP 52

NEMA-4 IP 56

**RATING (TRADITIONAL)**

950 BTU/hr @ 0 °F ΔT

1270 BTU/hr @ +20 °F ΔT *

**RATING (DIN 3168)**

278 Watts L35 L35

162 Watts L35 L50

* See page 10

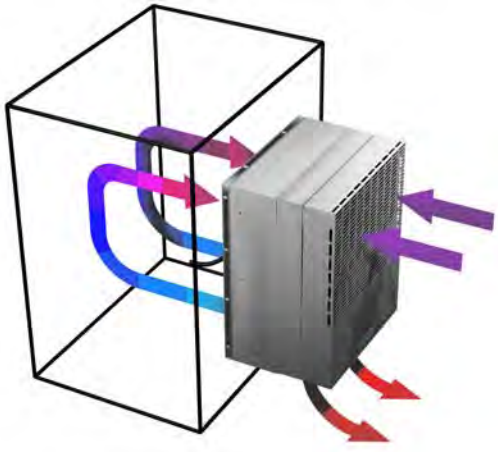

Air Flow Pattern

## DIMENSIONS

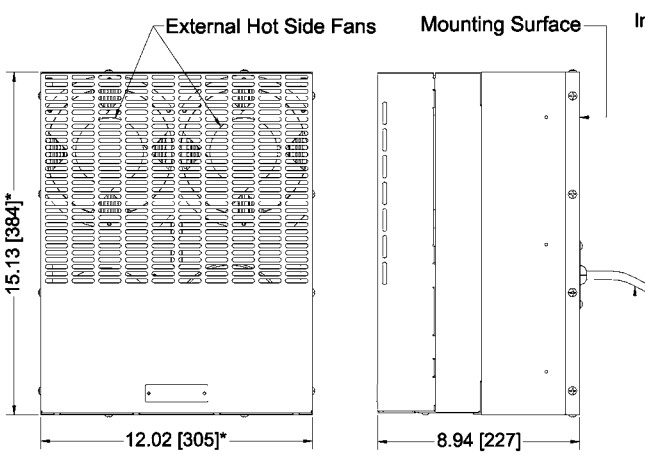


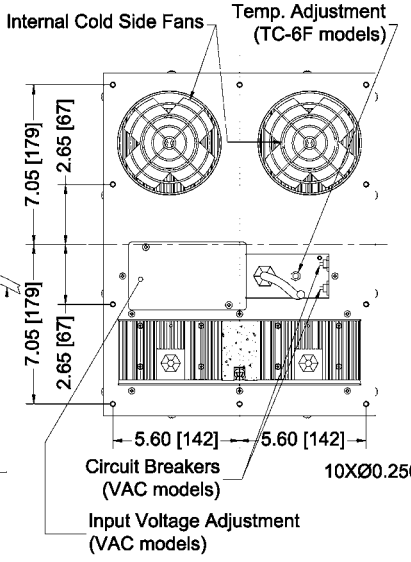


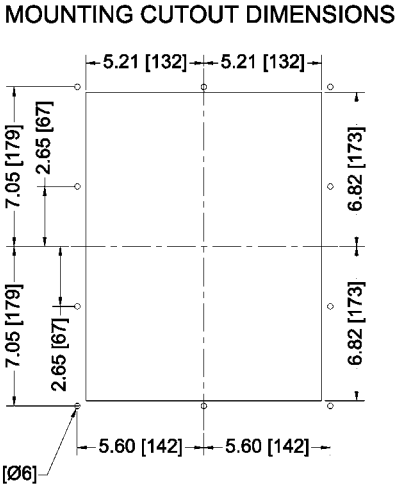


* Dimension does not include hardware.
Mounting hardware and gasket included but not shown.
Dimension: Inches [Millimeters]

# FHP-750 | Air Conditioner

Air Cooled
Flush Mounted
NEMA-12, NEMA-4

120 VAC, 240 VAC Input

## FEATURES

- Externally mounted, no intrusion
- Compact (only 12"L X 6"W X 9"D)
- Weighs only 16 lbs. (7.2 kg)
- Ambient range -10°C to +70°C
- No compressor, fluorocarbons or filters
- Virtually maintenance-free operation
- Stainless steel exterior housing
- NEMA-4 and NEMA-12 versions
- Both 120 VAC and 240 VAC available
- Mounts and operates in any orientation (condensate removal system may not work properly in all orientations)

## INCLUDES

- Integral power supply
- Power input cable
- Condensate removal system
- Adjustable temperature control
- Gasket for mounting
- Mounting hardware

## OPTIONS

- Other temperature settings for single set point controls
- Custom finishes

EN 60335-1
EN60335-2-40

## SPECIFICATIONS

| | MODEL | PART NUMBER | NOTES | PERFORMANCE RATING BTU/HR | VOLTAGE VAC 50/60 HZ | CURRENT AMPS. | WEIGHT LBS. (KG) | TEMP. CONTROL | OPERATING AMBIENT TEMPERATURE RANGE °C | OPERATING ENCLOSURE TEMPERATURE RANGE °C | AGENCY APPROVALS |
|---|---|---|---|---|---|---|---|---|---|---|---|
| NEMA 12 | FHP-750 | 7-A580-0-000 | Cool only | 400-450 | 120 | 4.0 | 16 (7.2) | TC-6F | -15/+65 | -10/+60 | UL1995, CSA22.2 |
| | FHP-750 | 7-A550-0-000 | Cool only | 400-450 | 120 | 4.0 | 16 (7.2) | EXT* | -15/+65 | -10/+60 | UL1995, CSA22.2 |
| | FHP-750 | 7-A5F0-0-000 | Cool only | 400-450 | 120 | 4.0 | 16 (7.2) | 85°F (30°C) | -15/+65 | -10/+60 | UL1995, CSA22.2 |
| | FHP-752 | 7-A582-0-000 | Cool only | 400-450 | 240 | 2.5 | 23 (10.5) | TC-6F | -15/+65 | -10/+60 | UL1995, CSA22.2 |
| | FHP-752 | 7-A552-0-000 | Cool only | 400-450 | 240 | 2.5 | 23 (10.5) | EXT* | -15/+65 | -10/+60 | UL1995, CSA22.2 |
| | FHP-752 | 7-A5F2-0-000 | Cool only | 400-450 | 240 | 2.5 | 23 (10.5) | 85°F (30°C) | -15/+65 | -10/+60 | UL1995, CSA22.2 |
| NEMA 4 | FHP-750XE | 7-A580-4-000 | Cool only | 400-450 | 120 | 5.0 | 19(8.6) | TC-6F | -40/+65 | -10/+60 | UL1995, CSA22.2 |
| | FHP-750XE | 7-A550-4-000 | Cool only | 400-450 | 120 | 5.0 | 19(8.6) | EXT* | -40/+65 | -10/+60 | UL1995, CSA22.2 |
| | FHP-750XE | 7-A5F0-4-000 | Cool only | 400-450 | 120 | 4.0 | 19(8.6) | 85°F (30°C) | -40/+65 | -10/+60 | UL1995, CSA22.2 |
| | FHP-752XE | 7-A582-4-000 | Cool only | 400-450 | 240 | 2.5 | 25(11.5) | TC-6F | -40/+65 | -10/+60 | UL1995, CSA22.2 |
| | FHP-752XE | 7-A552-4-000 | Cool only | 400-450 | 240 | 2.5 | 25(11.5) | EXT* | -40/+65 | -10/+60 | UL1995, CSA22.2 |
| | FHP-752XE | 7-A5F2-4-000 | Cool only | 400-450 | 240 | 2.5 | 2(11.5) | 85°F (30°C) | -40/+65 | -10/+60 | UL1995, CSA22.2 |

* Unit is set for 5-32 VDC external signal, relay(s) included

# FHP-750

## PERFORMANCE CURVE

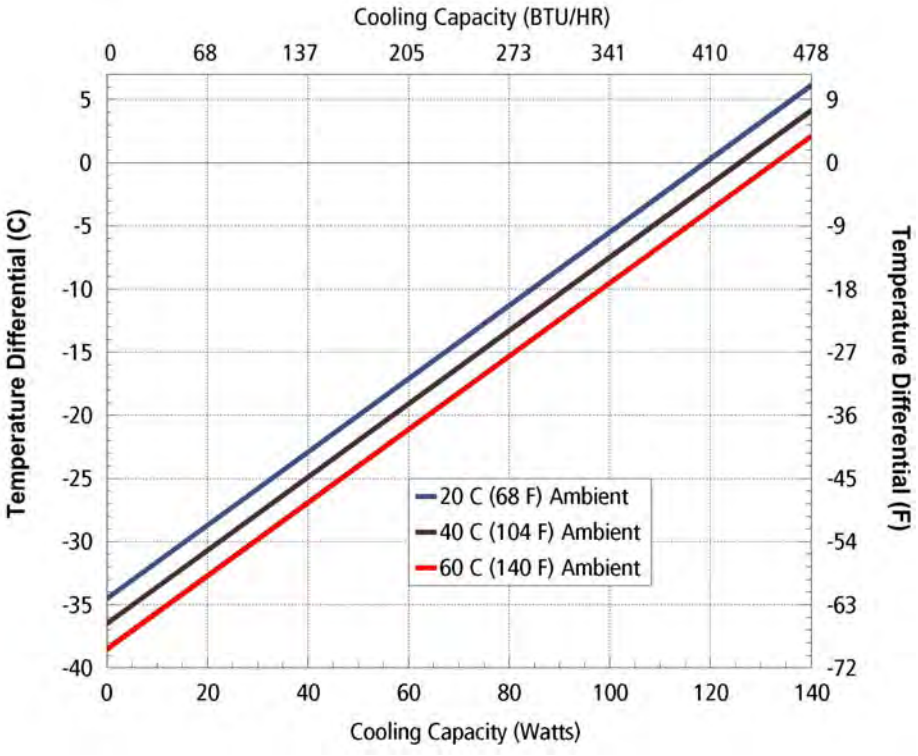


| Equation of line: y=ΔT(°C) x=Capacity (Watts) | | | |
|---|---|---|---|
| **Ambient Temp** | **20°C** | **40°C** | **60°C** |
| Enclosure Air | y=.29x-34.5 | y=.29x-36.5 | y=.29x-38.5 |
| Cold Sink | y=.18x-34.5 | y=.18x-36.5 | y=.18x-38.5 |

**MOUNTING STYLE**

Flush Mounted

**ENVIRONMENTS SERVED**

NEMA-12 IP 52

NEMA-4 IP 56

**RATING (TRADITIONAL)**

430 BTU/hr @ 0 °F ΔT

560 BTU/hr @ +20 °F ΔT *

**RATING (DIN 3168)**

125 Watts L35 L35

78 Watts L35 L50

* See page 10

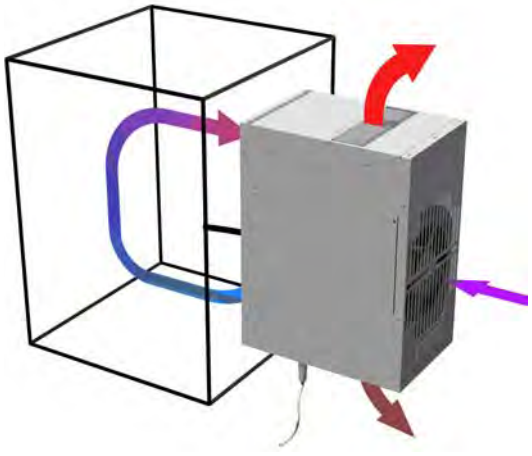

Air Flow Pattern

## DIMENSIONS

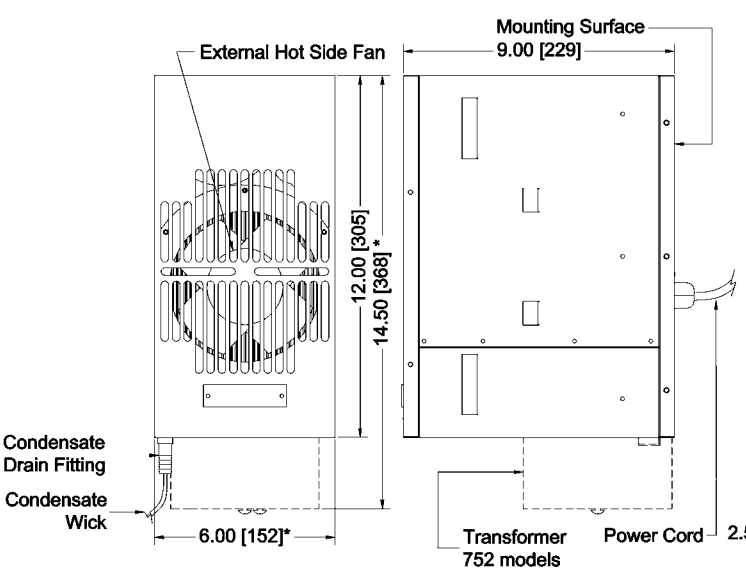


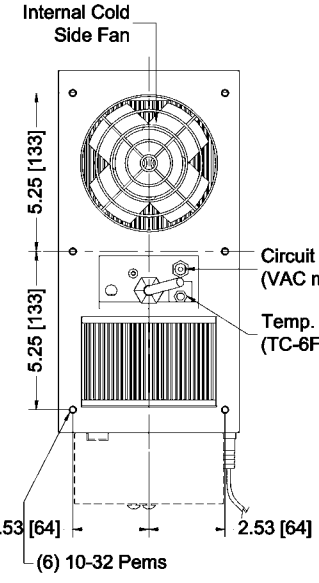


MOUNTING CUTOUT DIMENSION

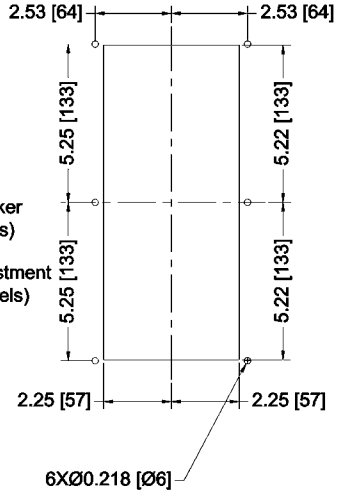


* Dimension does not include hardware.
Mounting hardware and gasket included but not shown.
Dimension: Inches [Millimeters]

# FHP-750 | Air Conditioner

Air Cooled
Flush Mounted
NEMA-12, NEMA-4

24 VDC Input

## FEATURES

- Externally mounted, no intrusion
- Compact (only 12"L X 6"W X 9"D)
- Weighs only 16 lbs. (7.2 kg)
- Ambient range -10°C to +70°C
- No compressor, fluorocarbons or filters
- Virtually maintenance-free operation
- Stainless steel exterior housing
- NEMA-4 and NEMA-12 versions
- Mounts and operates in any orientation (condensate removal system may not work properly in all orientations)

## INCLUDES

- Power input leads
- Condensate removal system
- Adjustable temperature control
- Gasket for mounting
- Mounting hardware

## INCLUDES

- Other temperature settings for single set point controls
- Custom finishes

## SPECIFICATIONS

| | MODEL | PART NUMBER | NOTES | COP @ 0 °C DT L35 L35 | VOLTAGE VDC | CURRENT AMPS. | TEMP. CONTROL | OPERATING AMBIENT TEMPERATURE RANGE °C | OPERATING ENCLOSURE TEMPERATURE RANGE °C |
|---|---|---|---|---|---|---|---|---|---|
| NEMA 12 | FHP-750 | 7-A585-0-000 | Cool only | 0.58 | 24(16-28) | 9 | TC-6F | -40/+70 | -10/+60 |
| | FHP-750 | 7-A555-0-000 | Cool only | 0.58 | 24(16-28) | 9 | EXT* | -40/+70 | -10/+60 |
| | FHP-750 | 7-A5F5-0-000 | Cool only | 0.58 | 24(16-28) | 9 | 85°F (30°C) | -40/+70 | -10/+60 |
| | FHP-750HC | 7-A5I5-1-000 | Heat/Cool Rev. Pol. | 0.58 | 24(16-28) | 9 | TC-7F | -40/+70 | -10/+60 |
| | FHP-750HC | 7-A595-1-000 | Heat/Cool Rev. Pol. | 0.58 | 24(16-28) | 9 | EXT† | -20/+70 | -10/+60 |
| NEMA 4 | FHP-750XE | 7-A585-4-000 | Cool only | 0.58 | 24(16-28) | 9 | TC-6F | -40/+70 | -10/+60 |
| | FHP-750XE | 7-A555-4-000 | Cool only | 0.58 | 24(16-28) | 9 | EXT* | -40/+70 | -10/+60 |
| | FHP-750XE | 7-A5F5-4-000 | Cool only | 0.58 | 24(16-28) | 9 | 85°F (30°C) | -40/+70 | -10/+60 |
| | FHP-750XEHC | 7-A5I5-5-000 | Heat/Cool Rev. Pol. | 0.58 | 24(16-28) | 9 | TC-7F | -40/+70 | -10/+60 |
| | FHP-750XEHC | 7-A595-5-000 | Heat/Cool Rev. Pol. | 0.58 | 24(16-28) | 9 | EXT† | -20/+70 | -10/+60 |

***** Unit is set for 5-32 VDC external signal, relay(s) included

† Unit can be used with external H-Bridge "Relay-P" see page 139

# FHP-750

## PERFORMANCE CURVE

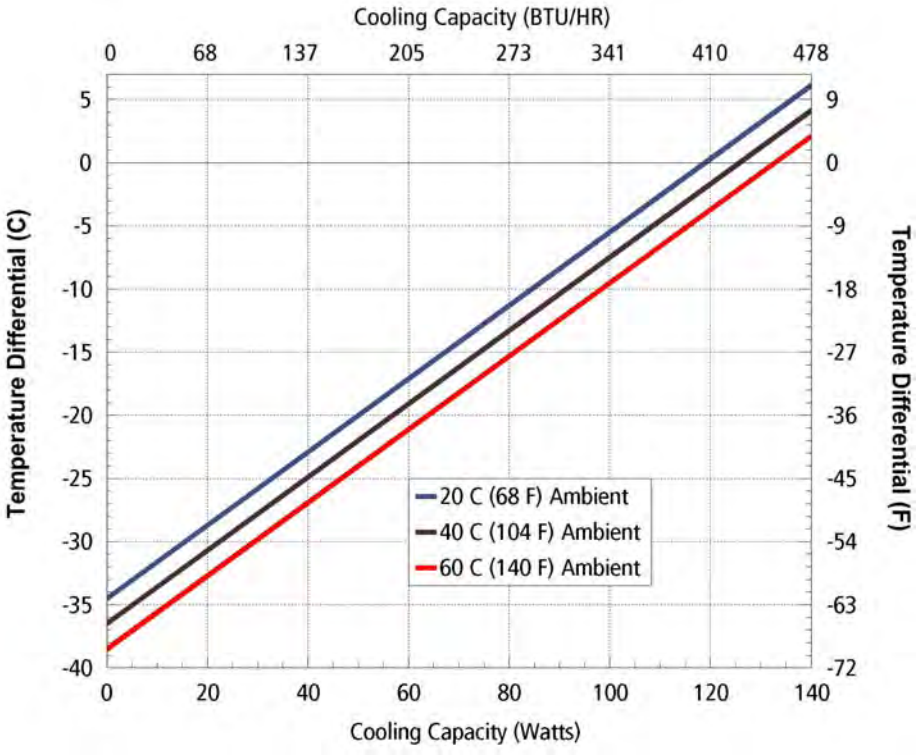


| Equation of line: y=ΔT(°C) x=Capacity (Watts) | | | |
|---|---|---|---|
| **Ambient Temp** | **20°C** | **40°C** | **60°C** |
| Enclosure Air | y=.29x-34.5 | y=.29x-36.5 | y=.29x-38.5 |
| Cold Sink | y=.18x-34.5 | y=.18x-36.5 | y=.18x-38.5 |

**MOUNTING STYLE**

Flush Mounted

**ENVIRONMENTS SERVED**

NEMA-12 IP 52

NEMA-4 IP 56

**RATING (TRADITIONAL)**

430 BTU/hr @ 0 °F ΔT

560 BTU/hr @ +20 °F ΔT *

**RATING (DIN 3168)**

125 Watts L35 L35

78 Watts L35 L50

* See page 10

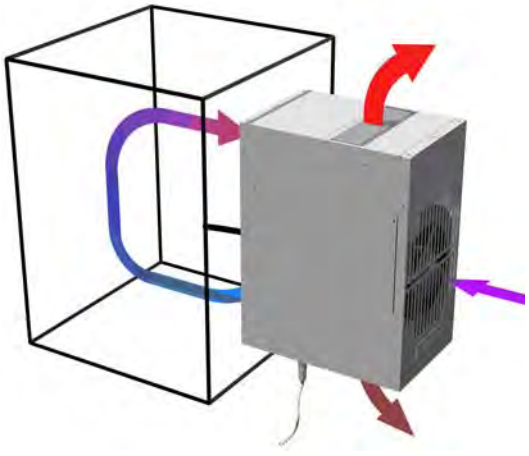

Air Flow Pattern

## DIMENSIONS

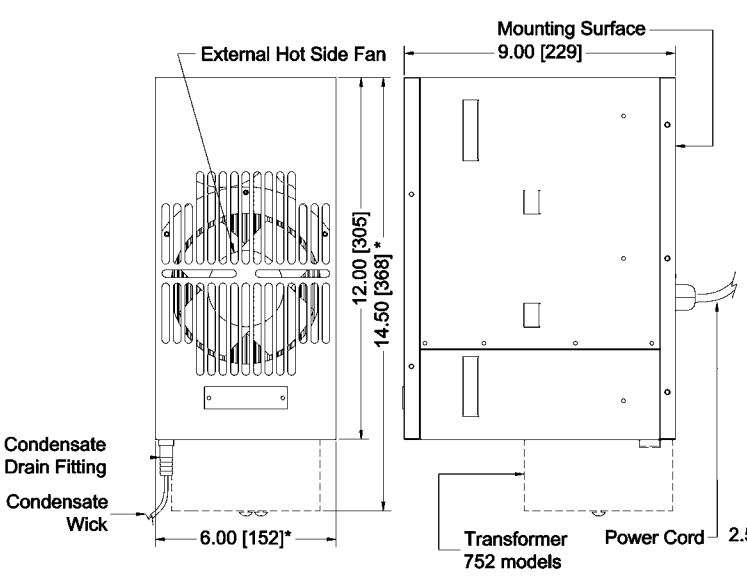


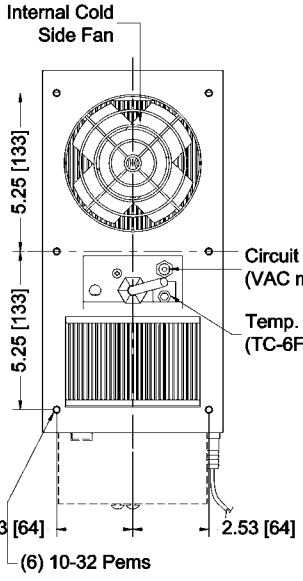


MOUNTING CUTOUT DIMENSION

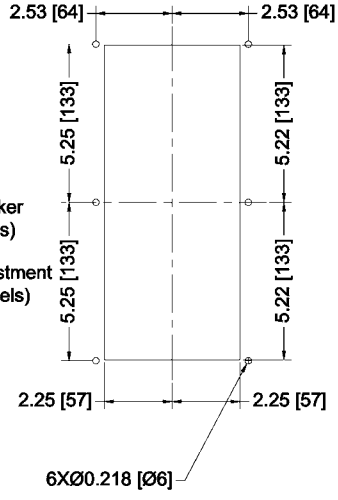


* Dimension does not include hardware.
Mounting hardware and gasket included but not shown.
Dimension: Inches [Millimeters]

# FHP-500 | Air Conditioner Series

Air Cooled
Flush Mount
Nema-12, 4, 4X

24 VDC

## FEATURES

- Compact (only 10" X 5.86" X 7.92")
- Weighs only 16 lbs. (7.3 kg)
- Mounts and operates in any orientation: horizontal, vertical, etc.
- Low vibration and noise
- No moving parts except fans
- Environmentally safe
- No compressor, fluorocarbons or filters
- Virtually maintenance-free operation
- Stainless steel exterior housing

## INCLUDES

- Gasket and mounting hardware
- Hook-up leads
- Mounting hardware
- Temperature control

## OPTIONS

- Internal mounting
- Custom finishes or no cover
- Different temperature controls
- Consult factory for other voltages

## SPECIFICATIONS

| | MODEL | PART NUMBER | NOTES | COP @ 0 °C ΔT L35 L35 | VOLTAGE VDC | CURRENT AMPS. | TEMP. CONTROL | OPERATING AMBINET TEMPERATURE RANGE °C | OPERATING ENCLOSURE TEMPERATURE RANGE °C |
|---|---|---|---|---|---|---|---|---|---|
| NEMA 12 | FHP-570 | 7-G0F5-0-000 | Cool Only | 1.0 | 24 | 3.0 | 85°F (30°C) | -10/+70 | -10/+60 |
| | FHP-570HC | 7-G095-1-000 | Heat/Cool † | 1.0 | 24 | 3.0 | None* | -10/+70 | -10/+60 |
| | FHP-570HC | 7-G0I5-1-000 | Heat/Cool | 1.0 | 24 | 3.0 | TC-7F | -10/+70 | -10/+60 |
| | FHP-590 | 7-G0F5-0-001 | Cool Only | 0.72 | 24 | 6.9 | 85°F (30°C) | -10/+70 | -10/+60 |
| | FHP-590HC | 7-G095-1-001 | Heat/Cool † | 0.72 | 24 | 6.9 | None* | -10/+70 | -10/+60 |
| | FHP-590HC | 7-G0I5-1-001 | Heat/Cool | 0.72 | 24 | 6.9 | TC-7F | -10/+70 | -10/+60 |
| NEMA 4 | FHP-570XE | 7-G0F5-4-000 | Cool Only | 1.0 | 24 | 3.0 | 85°F (30°C) | -20/+70 | -10/+60 |
| | FHP-570XEHC | 7-G095-5-000 | Heat/Cool † | 1.0 | 24 | 3.0 | None* | -20/+70 | -10/+60 |
| | FHP-570XEHC | 7-G0I5-5-000 | HeatCool | 1.0 | 24 | 3.0 | TC-7F | -20/+70 | -10/+60 |
| | FHP-590XE | 7-G0F5-4-001 | Cool Only | 0.72 | 24 | 6.9 | 85°F (30°C) | -20/+70 | -10/+60 |
| | FHP-590XEHC | 7-G095-5-001 | Heat/Cool † | 0.72 | 24 | 6.9 | None* | -20/+70 | -10/+60 |
| | FHP-590XEHC | 7-G0I5-5-001 | Heat/Cool | 0.72 | 24 | 6.9 | TC-7F | -20/+70 | -10/+60 |
| NEMA 4X | FHP-570X | 7-G0F5-2-000 | Cool Only | 1.0 | 24 | 3.0 | 85°F (30°C) | -40/+70 | -10/+60 |
| | FHP-570XHC | 7-G095-3-000 | Heat/Cool † | 1.0 | 24 | 3.0 | None* | -40/+70 | -10/+60 |
| | FHP-570XHC | 7-G0I5-3-000 | Heat/Cool | 1.0 | 24 | 3.0 | TC-7F | -40/+70 | -10/+60 |
| | FHP-590X | 7-G0F5-2-001 | Cool Only | 0.72 | 24 | 6.9 | 85°F (30°C) | -40/+70 | -10/+60 |
| | FHP-590XHC | 7-G095-3-001 | Heat/Cool † | 0.72 | 24 | 6.9 | None* | -40/+70 | -10/+60 |
| | FHP-590XHC | 7-G0I5-3-001 | Heat/Cool | 0.72 | 24 | 6.9 | TC-7F | -40/+70 | -10/+60 |

* For controller options contact TECA

† Heating function via reverse polarity (controller dependent)

# FHP-500

## PERFORMANCE CURVE

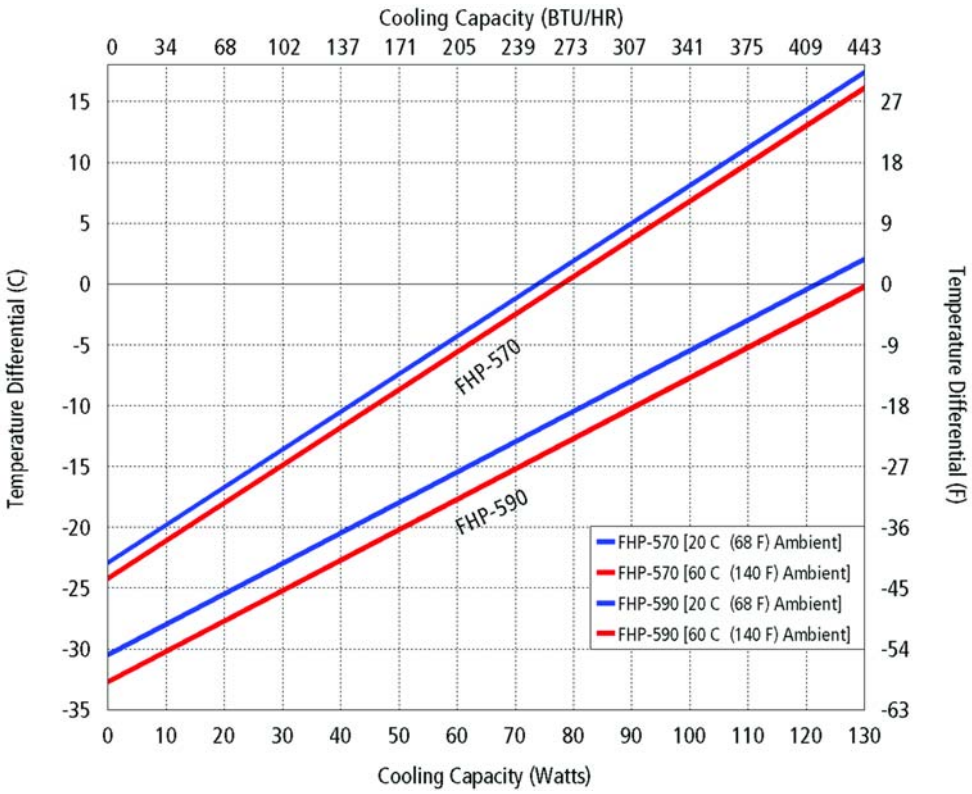


| Equation of Line: y=ΔT(°C) x=Capacity (Watts) | | |
|---|---|---|
| **Ambient Temp** | **20°C** | **60°C** |
| FHP-570 | y=.31x-22.9 | y=.31x-24.2 |
| FHP-590 | y=.25x-30.5 | y=.25x-32.7 |

**MOUNTING STYLE**

Thru Mount

**ENVIRONMENTS SERVED**

NEMA-12 IP 52
NEMA-4 IP 56

**RATING (TRADITIONAL)**

| | |
|---|---|
| FHP-570 | 251 BTU/hr @ 0 °F ΔT |
| | 372 BTU/hr @ +20 °F ΔT |
| FHP-590 | 416 BTU/hr @ 0 °F ΔT |
| | 563 BTU/hr @ +20 °F ΔT |

**RATING (DIN 3168)**

| | |
|---|---|
| FHP-570 | 75 Watts L35 L35 |
| | 27 Watts L35 L50 |
| FHP-590 | 124 Watts L35 L35 |
| | 68 Watts L35 L50 |

* See page 10

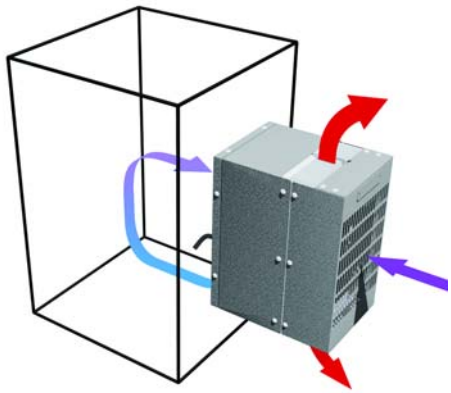

Air Flow Pattern

## DIMENSIONS

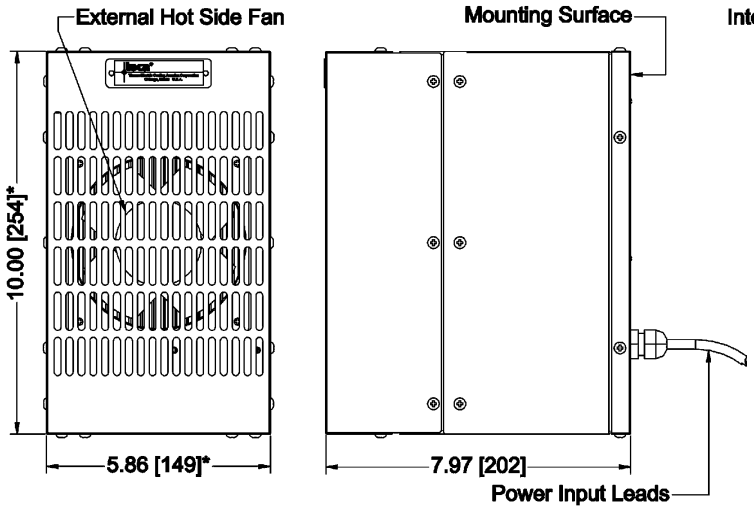


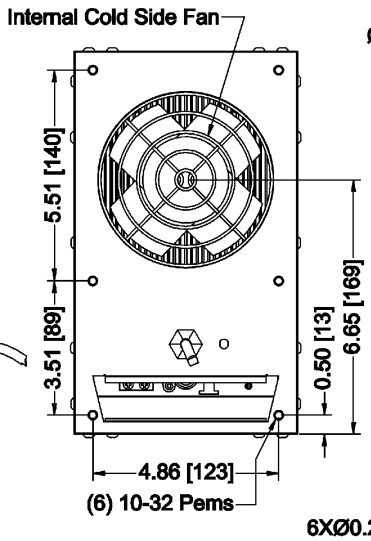


**MOUNTING CUTOUT DIMENSIONS**

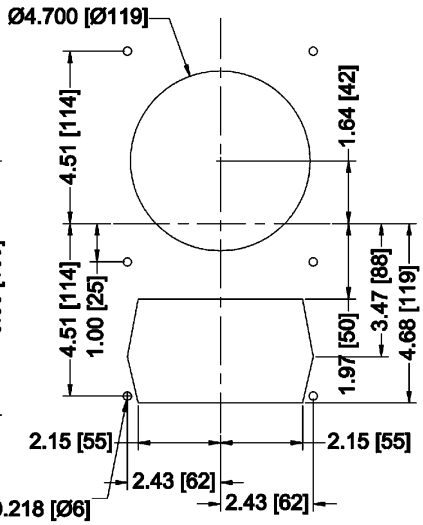


*** Dimension does not include hardware and gasket**
**Mounting hardware and gasket included but not shown**
**Dimensions: Inches [Millimeters]**

# FHP-401 | Air Conditioner Series

Air Cooled
Flush Mount
Nema-12

120/240 VAC

## FEATURES

- Compact (only 10" X 5.86" X 8.95")
- Weighs only 18 lbs. (8.2 kg)
- Mounts and operates in any orientation: horizontal, vertical, etc.
- Low vibration and noise
- No moving parts except fans
- Environmentally safe
- Dual voltage
- No compressor, fluorocarbons or filters
- Virtually maintenance-free operation
- Stainless steel exterior housing

## INCLUDES

- Integral power supply 120/240 VAC
- Gasket and mounting hardware
- Temperature control

## OPTIONS

- Internal mounting
- Custom finishes or no cover
- Consult factory for other voltages

## SPECIFICATIONS

| MODEL | PART NUMBER | NOTES | PERFORMANCE RATING BTU/HR | VOLTAGE VAC 50/60HZ | CURRENT AMPS. | TEMP. CONTROL | OPERATING AMBIENT TEMPERATURE RANGE °C | OPERATING ENCLOSURE TEMPERATURE RANGE °C |
|---|---|---|---|---|---|---|---|---|
| FHP-401 | 7-F090-0-000 | Cool only | 310-350 | 120 | 1.3 | None | -10/+70 | -10/+60 |
| FHP-401 | 7-F080-0-000 | Cool only | 310-350 | 120 | 1.3 | TC-6F | -40/+70 | -10/+60 |
| FHP-401 | 7-F0F0-0-000 | Cool only | 310-350 | 120 | 1.3 | 85°F (30°C) | -40/+70 | -10/+60 |
| FHP-401 | 7-F050-0-000 | Cool only | 310-350 | 120 | 1.3 | EXT* | -40/+70 | -10/+60 |
| FHP-401HC | 7-F0I0-1-000 | Heat/Cool | 310-350 | 120 | 1.3 | TC-7F | -40/+70 | -10/+60 |
| FHP-402 | 7-F092-0-000 | Cool only | 310-350 | 240 | 0.70 | None | -10/+70 | -10/+60 |
| FHP-402 | 7-F082-0-000 | Cool only | 310-350 | 240 | 0.70 | TC-6F | -40/+70 | -10/+60 |
| FHP-402 | 7-F0F2-0-000 | Cool only | 310-350 | 240 | 0.70 | 85°F (30°C) | -40/+70 | -10/+60 |
| FHP-402 | 7-F052-0-000 | Cool only | 310-350 | 240 | 0.70 | EXT* | -40/+70 | -10/+60 |
| FHP-402HC | 7-F0I2-1-000 | Heat/Cool | 310-350 | 240 | 0.70 | TC-7F | -40/+70 | -10/+60 |

NEMA 12

* Unit is set for 5-32 VDC external signal, relay(s) included

# FHP-401

**MOUNTING STYLE**

Flush Mount

**ENVIRONMENTS SERVED**

NEMA-12 IP 52

**RATING (TRADITIONAL)**

302 BTU/hr @ 0 °F ΔT

447 BTU/hr @ +20 °F ΔT

**RATING (DIN 3168)**

91 Watts L35 L35

38 Watts L35 L50

* See page 10

## PERFORMANCE CURVE

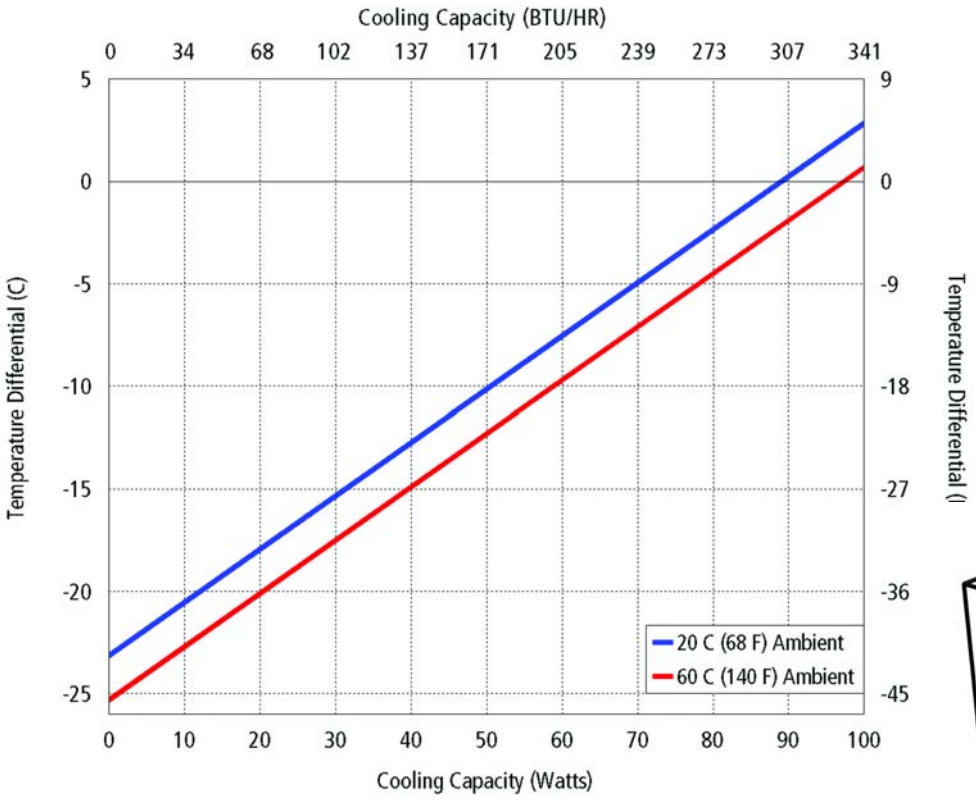


| Equation of Line: y=ΔT(°C) x=Capacity (Watts) | | |
|---|---|---|
| **Ambient Temp** | **20°C** | **60°C** |
| Enclosure Air | y=.26x-23.1 | y=.26x-25.3 |

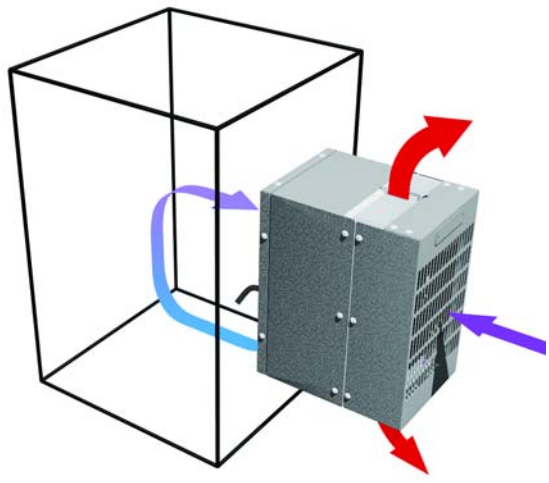

Air Flow Pattern

## DIMENSIONS

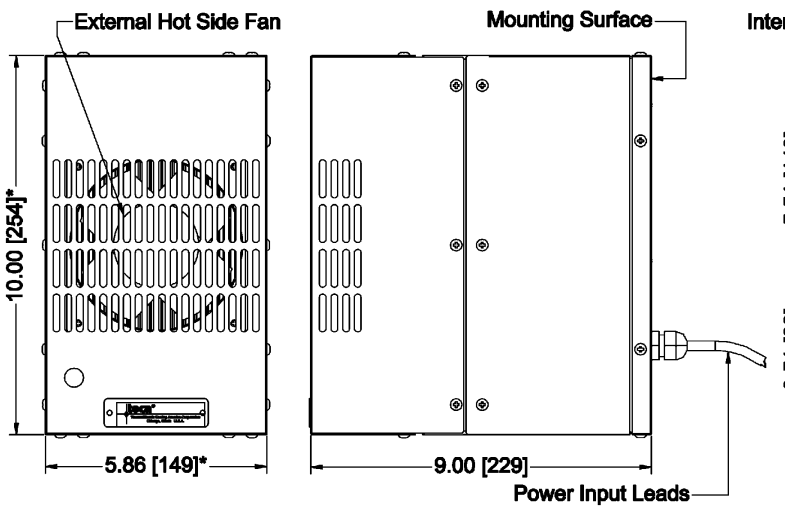


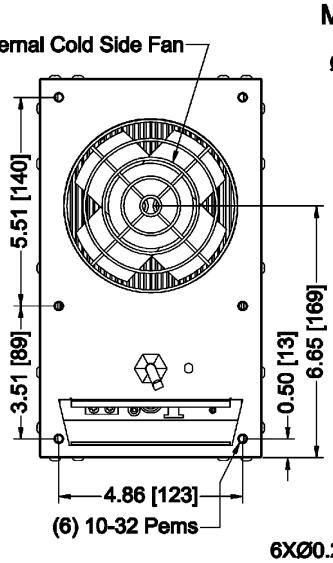


**MOUNTING CUTOUT DIMENSIONS**

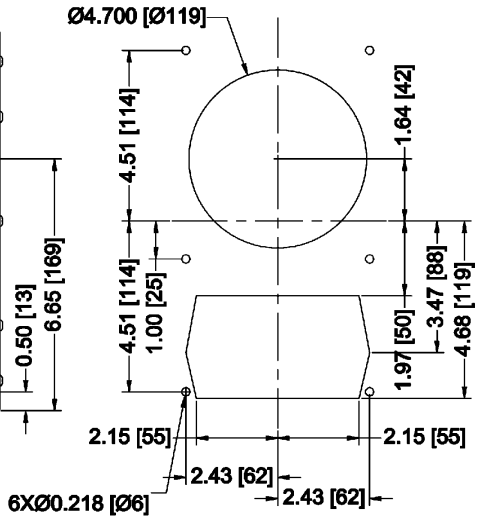


* Dimension does not include hardware and gasket
Mounting hardware and gasket included but not shown
Dimensions: Inches [Millimeters]

# FHP-400 | Air Conditioner Series

Air Cooled
Flush Mount
Nema-12, 4, 4X

24 VDC

## FEATURES

- Compact (only 10" X 5.86" X 7.92")
- Weighs only 16 lbs. (7.3 kg)
- Mounts and operates in any orientation: horizontal, vertical, etc.
- Low vibration and noise
- No moving parts except fans
- Environmentally safe
- No compressor, fluorocarbons or filters
- Virtually maintenance-free operation
- Stainless steel exterior housing

## INCLUDES

- Gasket and mounting hardware
- Hook-up leads
- Mounting hardware
- Temperature control

## OPTIONS

- Internal mounting
- Custom finishes or no cover
- Different temperature controls
- Consult factory for other voltages

## SPECIFICATIONS

| | MODEL | PART NUMBER | NOTES | COP @ 0 °C ΔT L35 L35 | VOLTAGE VDC | CURRENT AMPS. | TEMP. CONTROL | OPERATING AMBIent TEMPERATURE RANGE °C | OPERATING ENCLOSURE TEMPERATURE RANGE °C |
|---|---|---|---|---|---|---|---|---|---|
| NEMA 12 | FHP-450 | 7-F0F5-0-000 | Cool Only | 0.99 | 24 | 2.3 | 85°F (30°C) | -10/+70 | -10/+60 |
| | FHP-450HC | 7-F095-1-000 | Heat/Cool † | 0.99 | 24 | 2.3 | None* | -10/+70 | -10/+60 |
| | FHP-450HC | 7-F0I5-1-000 | Heat/Cool | 0.99 | 24 | 2.3 | TC-7F | -10/+70 | -10/+60 |
| | FHP-470 | 7-F0F5-0-001 | Cool Only | 0.48 | 24 | 7 | 85°F (30°C) | -10/+70 | -10/+60 |
| | FHP-470HC | 7-F095-1-001 | Heat/Cool † | 0.48 | 24 | 7 | None* | -10/+70 | -10/+60 |
| | FHP-470HC | 7-F0I5-1-001 | Heat/Cool | 0.48 | 24 | 7 | TC-7F | -10/+70 | -10/+60 |
| NEMA 4 | FHP-450XE | 7-F0F5-4-000 | Cool Only | 0.99 | 24 | 2.3 | 85°F (30°C) | -20/+70 | -10/+60 |
| | FHP-450XEHC | 7-F095-5-000 | Heat/Cool † | 0.99 | 24 | 2.3 | None* | -20/+70 | -10/+60 |
| | FHP-450XEHC | 7-F0I5-5-000 | Heat/Cool | 0.99 | 24 | 2.3 | TC-7F | -20/+70 | -10/+60 |
| | FHP-470XE | 7-F0F5-4-001 | Cool Only | 0.48 | 24 | 7 | 85°F (30°C) | -20/+70 | -10/+60 |
| | FHP-470XEHC | 7-F095-5-001 | Heat/Cool † | 0.48 | 24 | 7 | None* | -20/+70 | -10/+60 |
| | FHP-470XEHC | 7-F0I5-5-001 | Heat/Cool | 0.48 | 24 | 7 | TC-7F | -20/+70 | -10/+60 |
| NEMA 4X | FHP-450X | 7-F0F5-2-000 | Cool Only | 0.99 | 24 | 2.3 | 85°F (30°C) | -40/+70 | -10/+60 |
| | FHP-450XHC | 7-F095-3-000 | Heat/Cool † | 0.99 | 24 | 2.3 | None * | -40/+70 | -10/+60 |
| | FHP-450XHC | 7-F0I5-3-000 | Heat/Cool | 0.99 | 24 | 2.3 | TC-7F | -40/+70 | -10/+60 |
| | FHP-470X | 7-F0F5-2-001 | Cool Only | 0.48 | 24 | 7 | 85°F (30°C) | -40/+70 | -10/+60 |
| | FHP-470XHC | 7-F095-3-001 | Heat/Cool † | 0.48 | 24 | 7 | None* | -40/+70 | -10/+60 |
| | FHP-470XHC | 7-F0I5-3-001 | Heat/Cool | 0.48 | 24 | 7 | TC-7F | -40/+70 | -10/+60 |

* For controller options contact TECA

† Heating function via reverse polarity (controller dependent)

# FHP-400

## PERFORMANCE CURVE

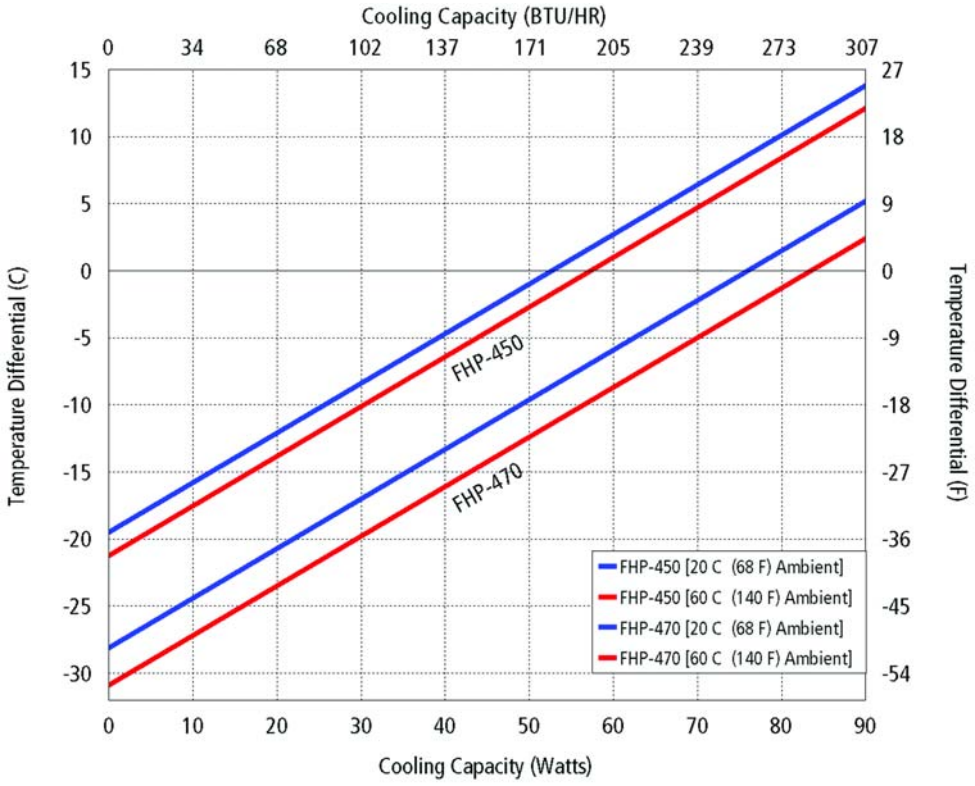


| Equation of Line: y=ΔT(°C) x=Capacity (Watts) | | |
|---|---|---|
| **Ambient Temp** | **20°C** | **60°C** |
| FHP-450 | y=.37x-19.5 | y=.37x-21.2 |
| FHP-470 | y=.37x-28.1 | y=.37x-30.9 |

**MOUNTING STYLE**

Thru Mount

**ENVIRONMENTS SERVED**

NEMA-12 IP 52

NEMA-4 IP 56

**RATING (TRADITIONAL)**

| | |
|---|---|
| FHP-450 | 179 BTU/hr @ 0 °F ΔT |
| | 280 BTU/hr @ +20 °F ΔT |
| FHP-470 | 259 BTU/hr @ 0 °F ΔT |
| | 360 BTU/hr @ +20 °F ΔT |

**RATING (DIN 3168)**

| | |
|---|---|
| FHP-450 | 55 Watts L35 L35 |
| | 15 Watts L35 L50 |
| FHP-470 | 80 Watts L35 L35 |
| | 40 Watts L35 L50 |

✱ See page 10

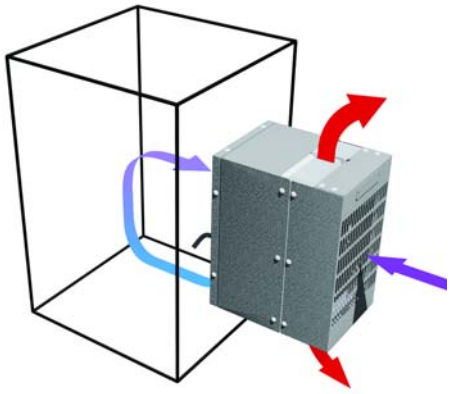

Air Flow Pattern

## DIMENSIONS

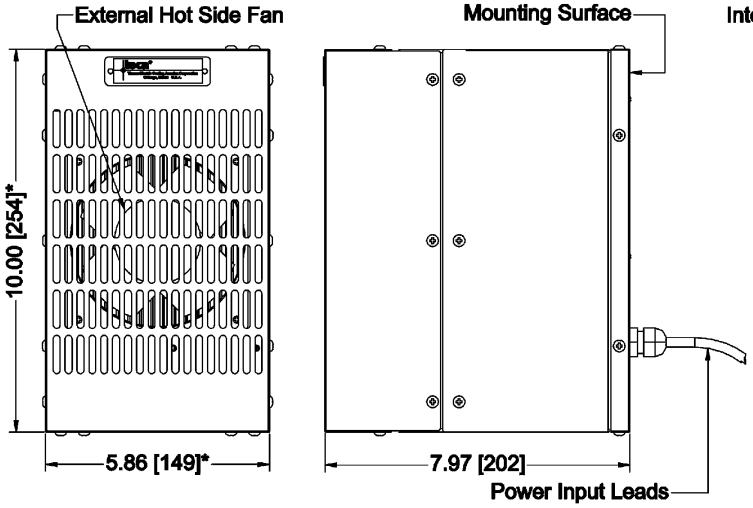


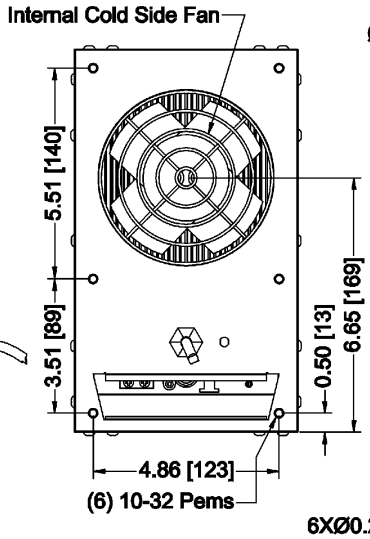


**MOUNTING CUTOUT DIMENSIONS**

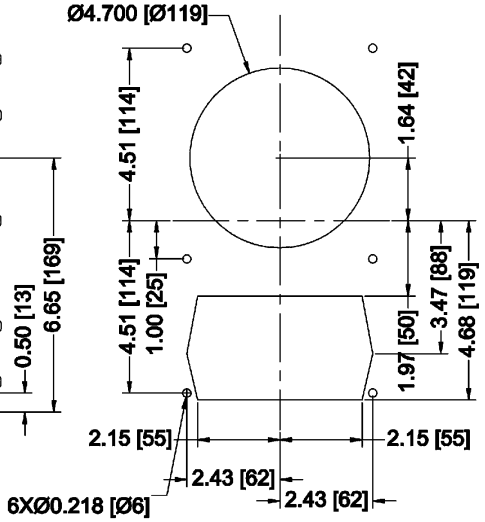


* Dimension does not include hardware and gasket
Mounting hardware and gasket included but not shown
Dimensions: Inches [Millimeters]

## DRIP PANS

### Horizontal Cold Side Fin Orientation

**DHA-150**

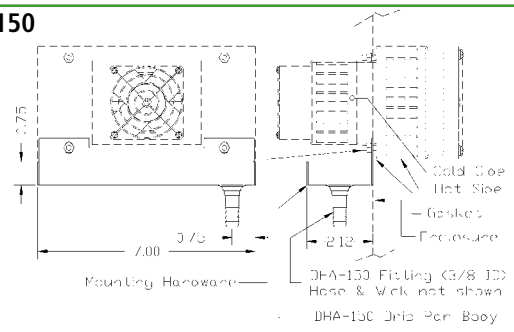


**DHA-300**

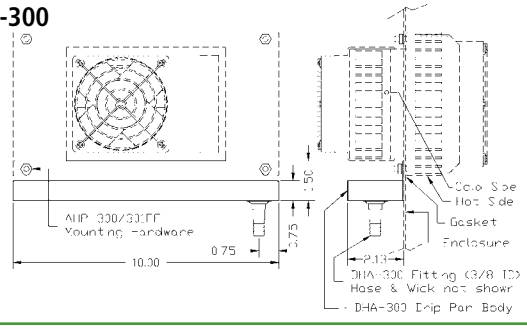


**DHA-1200**

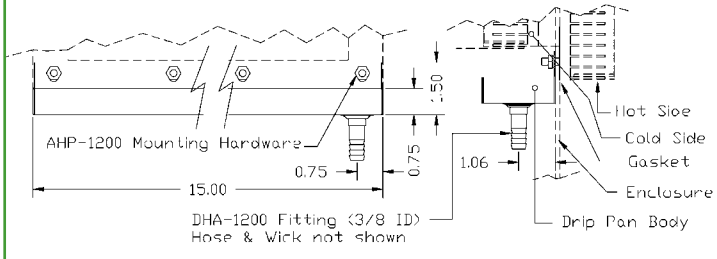


**DHA-1501**

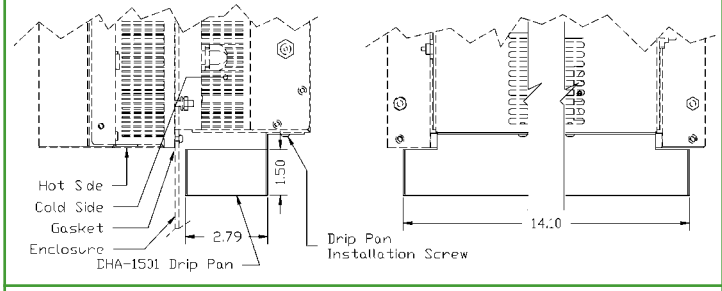


**DHA-1800**

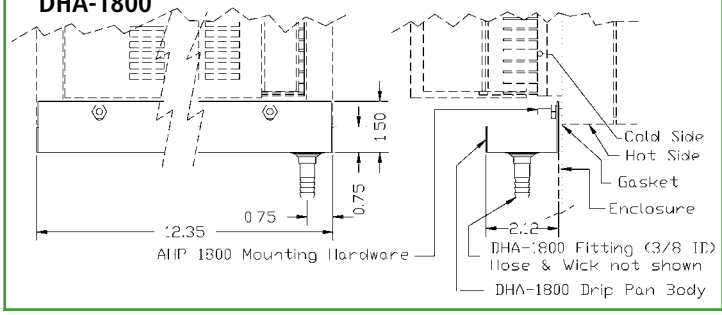


### Vertical Cold Side Fin Orientation

**DVA-150**

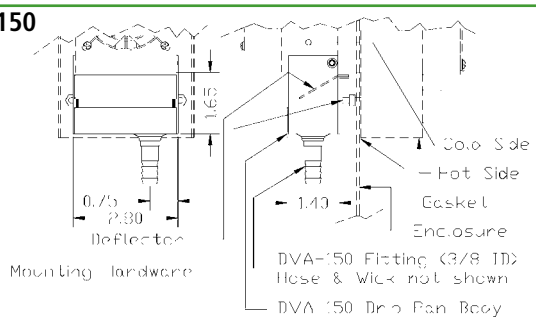


**DVA-300**

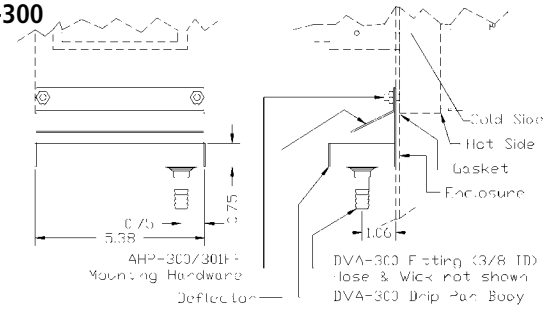


**DVA-1200**

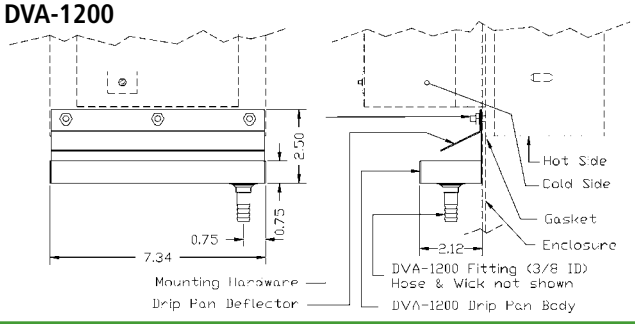


**DVA-1501**

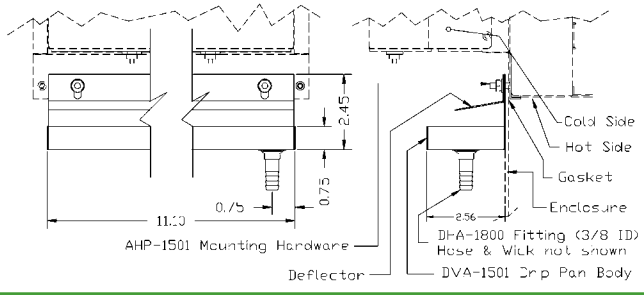


**DVA-1800**

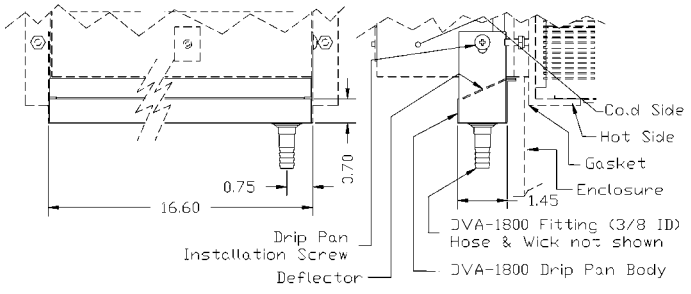

## ENCLOSURE HEATERS

TECA Enclosure heaters are the easiest and most cost effective way to add needed heat to enclosures.
These heaters come in 120 VAC and 240 VAC configurations in both 200 WATTS and 400 WATTS versions.
The integral thermostat reduces the complexity and the integral overheat safety ensures that the temperature rise is kept within safe margin.

## FEATURES

- Power input cord
- Integral fan(s)
- Integral thermostatic control (temperature = 15 °C)
- Overheat safety circuit (temperature = 75 °C)
- Accessory threaded holes for installation

## DIMENSIONS

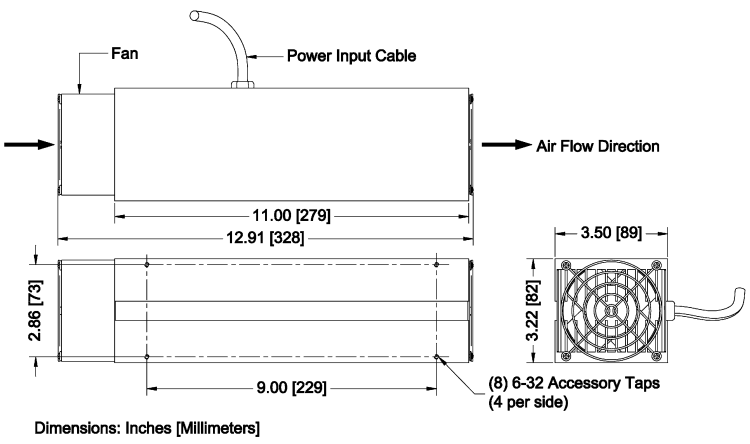


**EH-2001, EH-2002**

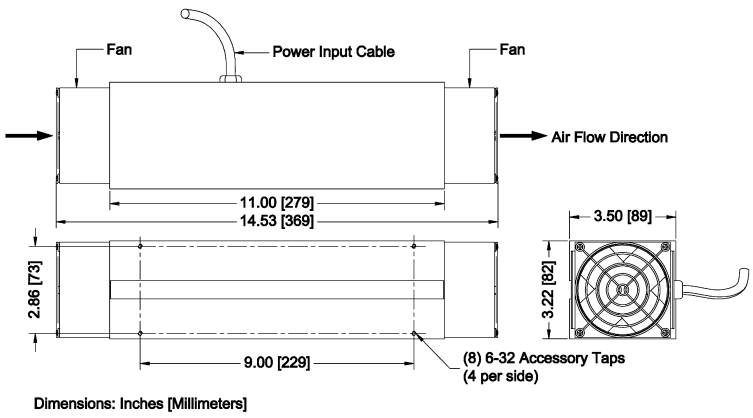


**EH-4001, EH-4002**

## SPECIFICATIONS

| MODEL | NOTES | POWER RATING WATTS | VOLTAGE VAC 50/60 HZ | CURRENT AMPS. | WEIGHT LBS. (kg) | TEMP. CONTROL | OVERHEAT SAFETY |
|---|---|---|---|---|---|---|---|
| EH-2001 | Single Fan | 200 | 120 | 1.7 | 7 (3.2) | 15 °C | 75 °C |
| EH-2002 | Single Fan | 200 | 240 | 0.83 | 7 (3.2) | 15 °C | 75 °C |
| EH-4001 | Dual Fan | 400 | 120 | 3.4 | 7 (3.2) | 15 °C | 75 °C |
| EH-4002 | Dual Fan | 400 | 240 | 1.7 | 7 (3.2) | 15 °C | 75 °C |

# Liquid Cooled
# Air Conditioners

150-1180 BTU/hr

LIQUID COOLED

## LHP SERIES

Solid-state liquid-cooled air conditioners work well in tight enclosures.

### FEATURES

- No compressor, fluorocarbons or filters
- Virtually maintenance free operation
- Stainless steel exterior housing
- Mounts in any orientation
- No air exhaust

### APPLICATIONS

Cools equipment racks, PCs, Drives, Amplifiers, Motor Controls and other electronic equipment.

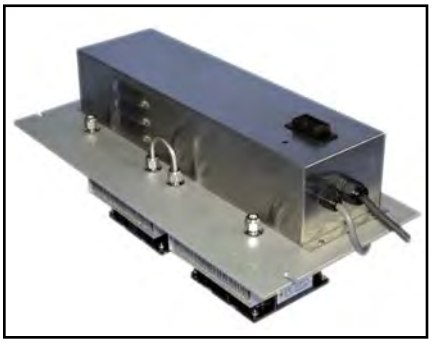

**LHP-1700FF** page 74

950-1180 BTU/hr rating,
19.0" x 8.7" mounting area
120 and 240 VAC input.

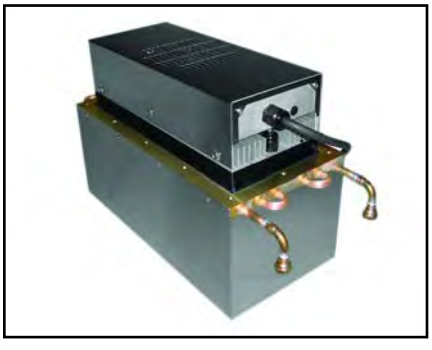

**LHP-1200** page 76

590-640 BTU/hr rating,
15.0" x 7.3" mounting area
120 VAC input

**LHP-800FF** page 78

460-540 BTU/hr rating,
6.6" x 6.6" mounting area
24 VDC for TE, 120 VAC fan

**LHP-300FF** page 78

150-175 BTU/hr rating,
4" x 4" mounting area
24 VDC for TE 120 VAC fan

TEAM TECA
CUSTOM
ENGINEERING
Call us at 888-TECA-USA.
We're here to help!

# LHP-1700FF | Liquid Cooled Air Conditioner

Liquid Cooled
Thru Mount
NEMA-12

120 VAC, 240 VAC Input

## FEATURES

- Standard 19" rack mount
- Weighs only 46 lbs. (21 kg)
- Ambient range 0ºC to +70ºC
- Available in 120 or 240 VAC
- Adaptable to NEMA-4 and explosion proof applications
- Can be mounted entirely inside purged enclosure
- No compressor, fluorocarbons or filters
- Virtually maintenance-free operation
- Stainless steel exterior housing
- Mounts and operates in any orientation

## INCLUDES

- Integral power supply
- Compression fittings
- Power cord

## SPECIFICATIONS

| MODEL | PART NUMBER | NOTES | PERFORMANCE RATING BTU/HR | VOLTAGE VAC 50/60 Hz | CURRENT AMPS. | Coolant Min Flow GPM | TEMP. CONTROL | OPERATING AMBIENT/COOLANT TEMPERATURE RANGE °C | OPERATING ENCLOSURE TEMPERATURE RANGE °C |
|---|---|---|---|---|---|---|---|---|---|
| LHP-1700FF | 2-1090-0-000 | Cool only | 950-1180 | 120 | 7.0 | 0.3 | None | 0/+70 | -10/+60 |
| LHP-1700FF | 2-1080-0-000 | Cool only | 950-1180 | 120 | 7.0 | 0.3 | TC-6F | 0/+70 | -10/+60 |
| LHP-1700FF | 2-1050-0-000 | Cool only | 950-1180 | 120 | 7.0 | 0.3 | EXT* | 0/+70 | -10/+60 |
| LHP-1700FFHC | 2-1030-1-000 | Heat/Cool | 950-1180 | 120 | 7.0 | 0.3 | TC-3F | 0/+70 | -10/+60 |
| LHP-1700FFHC | 2-1050-1-000 | Heat/Cool | 950-1180 | 120 | 7.0 | 0.3 | EXT* | 0/+70 | -10/+60 |
| LHP-1702FF | 2-1092-0-000 | Cool only | 950-1180 | 240 | 4.7 | 0.3 | None | 0/+70 | -10/+60 |
| LHP-1702FF | 2-1082-0-000 | Cool only | 950-1180 | 240 | 4.7 | 0.3 | TC-6F | 0/+70 | -10/+60 |
| LHP-1702FF | 2-1052-0-000 | Cool only | 950-1180 | 240 | 4.7 | 0.3 | EXT* | 0/+70 | -10/+60 |
| LHP-1702FFHC | 2-1032-1-000 | Heat/Cool | 950-1180 | 240 | 4.7 | 0.3 | TC-3F | 0/+70 | -10/+60 |
| LHP-1702FFHC | 2-1052-1-000 | Heat/Cool | 950-1180 | 240 | 4.7 | 0.3 | EXT* | 0/+70 | -10/+60 |

* Unit is set for 5-32 VDC external signal, relay(s) included

# LHP-1700FF

**MOUNTING STYLE**

Thru Mount

**ENVIRONMENTS SERVED**

NEMA-12 IP 52

**RATING (TRADITIONAL)**

1050 BTU/hr @ 0 °F ΔT

1320 BTU/hr @ +20 °F ΔT *

**RATING (DIN 3168)**

312 Watts L35 L35

225 Watts L35 L50

* See page 10

## PERFORMANCE CURVE

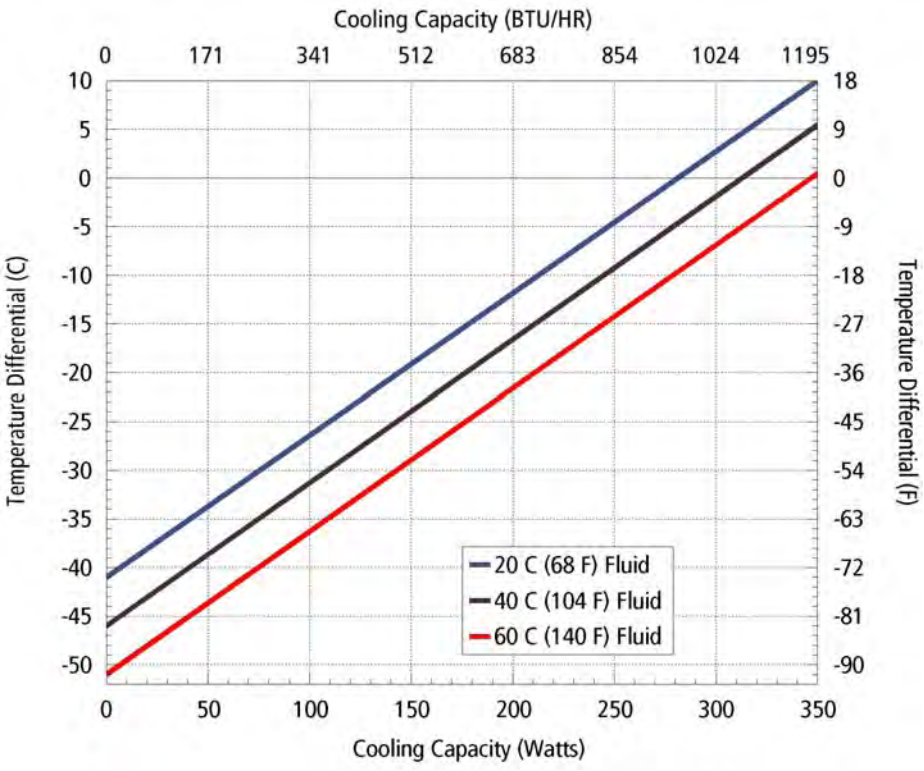


| Equation of line: y=ΔT(°C) x=Capacity (Watts) | | | |
|---|---|---|---|
| **Fluid Temp** | **20°C** | **40°C** | **60°C** |
| Enclosure Air | y=.147x-41.0 | y=.147x-46.0 | y=.147x-51.0 |
| Cold Sink | y=.11x-41.0 | y=.11x-46.0 | y=.11x-51.0 |

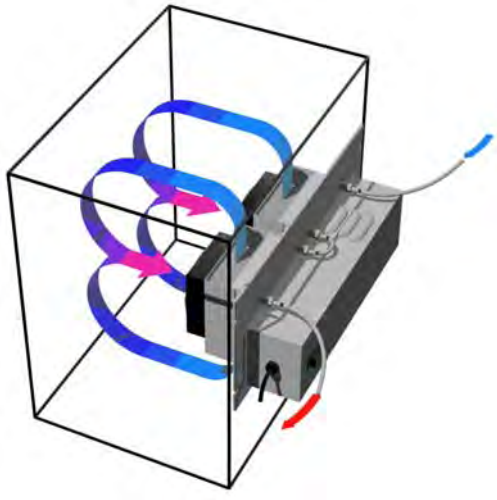

Air Flow Pattern

## DIMENSIONS

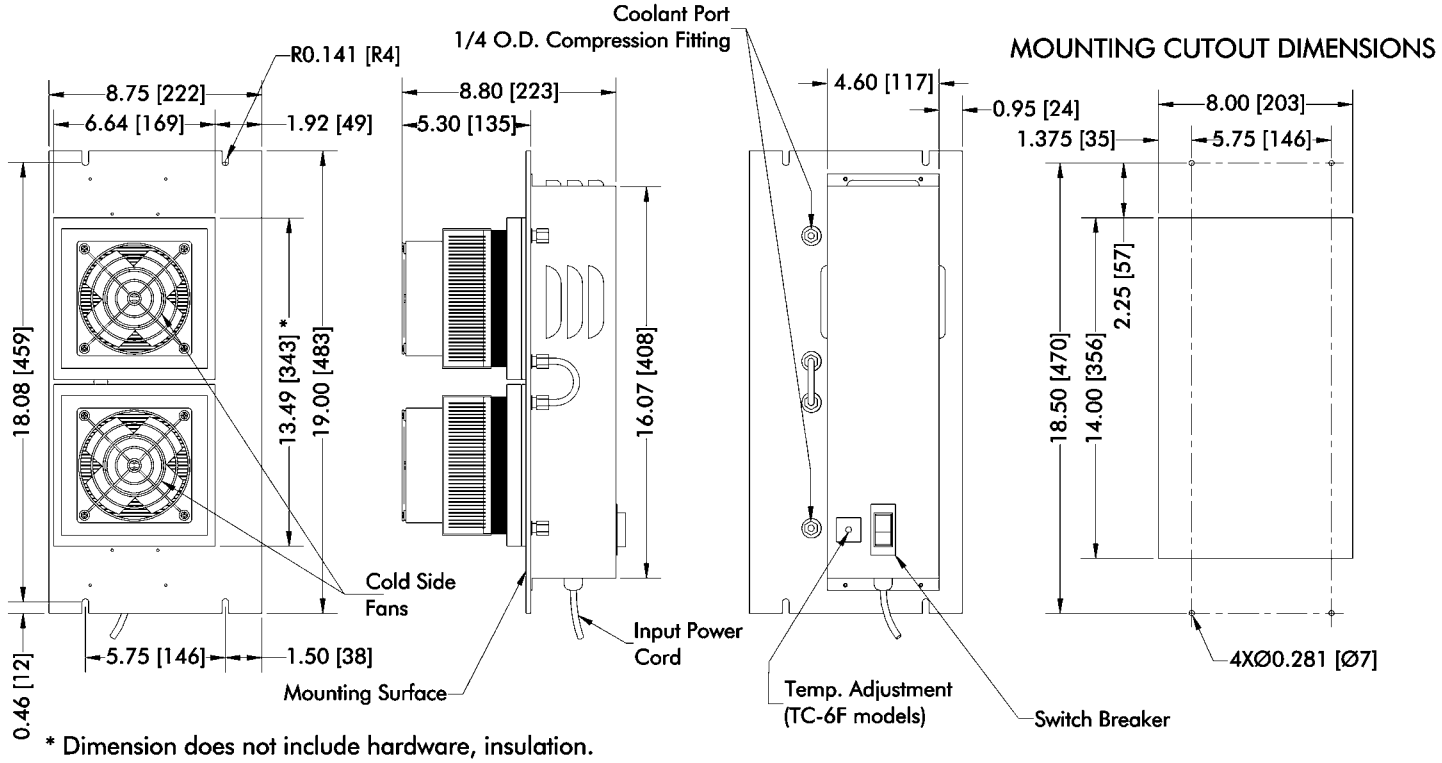


* Dimension does not include hardware, insulation.
Dimensions: inches [Millimeters]

# LHP-1200 | Liquid Cooled Air Conditioner

Liquid Cooled
Thru Mount
NEMA-4, 4X, C1 D2, C1 D1 & ATEX Zone 1

120 VAC Input

## FEATURES

- Compact, (only 15" L X 8" W X 7.3" D)
- Can be mounted entirely inside purged enclosure or maintain purge when wall mounted
- No compressor, fluorocarbons or filters
- Virtually maintenance-free operation
- Stainless steel exterior housing
- Mounts and operates in any orientation

## INCLUDES

- Integral power supply
- In/Out 1/4-18 NPT connectors for coolant
- Power cord
- Gasket and mounting hardware
- Adjustable temperature control

## SPECIFICATIONS

| | MODEL | PART NUMBER | NOTES | PERFORMANCE RATING BTU/HR | VOLTAGE VAC 50/60 Hz | CURRENT AMPS. | Coolant Min Flow GPM | WEIGHT LBS. (kg) | TEMP. CONTROL | OPERATING AMBIENT/Coolant TEMPERATURE RANGE °C | OPERATING ENCLOSURE TEMPERATURE RANGE °C |
|---|---|---|---|---|---|---|---|---|---|---|---|
| NEMA 4 | LHP-1200XE | 2-3090-4-000 | Cool only | 590-640 | 120 | 3.7 | 0.3 | 21(9.5) | None | 0/+70 | -10/+60 |
| | LHP-1200XE | 2-3080-4-000 | Cool only | 590-640 | 120 | 3.7 | 0.3 | 21(9.5) | TC-6F | 0/+70 | -10/+60 |
| | LHP-1200XE | 2-30F0-4-000 | Cool only | 590-640 | 120 | 3.7 | 0.3 | 21(9.5) | 85°F (30°) | 0/+70 | -10/+60 |
| | LHP-1200XE | 2-3050-4-000 | Cool only | 590-640 | 120 | 3.7 | 0.3 | 21(9.5) | EXT* | 0/+70 | -10/+60 |
| | LHP-1200XEHC | 2-3030-5-000 | Heat/Cool | 590-640 | 120 | 3.7 | 0.3 | 21(9.5) | TC-3F | 0/+70 | -10/+60 |
| | LHP-1200XEHC | 2-3050-5-000 | Heat/Cool | 590-640 | 120 | 3.7 | 0.3 | 21(9.5) | EXT* | 0/+70 | -10/+60 |
| CID 2 | LHP-1200XP † | 2-3090-2-027 | Cool only | 590-640 | 120 | 3.7 | 0.3 | 21(9.5) | None | 0/+71 | -10/+50 |
| | LHP-1200XP † | 2-3080-2-028 | Cool only | 590-640 | 120 | 3.7 | 0.3 | 21(9.5) | TC-6F | 0/+71 | -10/+50 |
| | LHP-1200XP † | 2-30F0-2-029 | Cool only | 590-640 | 120 | 3.7 | 0.3 | 21(9.5) | 85°F (30°) | 0/+71 | -10/+50 |
| | LHP-1200XP † | 2-3050-2-030 | Cool only | 590-640 | 120 | 3.7 | 0.3 | 21(9.5) | SSR drive | 0/+71 | -10/+50 |
| | LHP-1200XPHC † | 2-3030-3-031 | Heat/Cool | 590-640 | 120 | 3.7 | 0.3 | 21(9.5) | TC-3F | 0/+71 | -10/+50 |
| | LHP-1200XPHC † | 2-3050-3-032 | Heat/Cool | 590-640 | 120 | 3.7 | 0.3 | 21(9.5) | SSR drive | 0/+71 | -10/+50 |
| CID 1 | LHP-1200XP † | 2-3090-2-021 | Cool only | 590-640 | 120 | 3.7 | 0.3 | 30(13.6) | none | 0/+50 | -10/+50 |
| | LHP-1200XP † | 2-3080-2-022 | Cool only | 590-640 | 120 | 3.7 | 0.3 | 30(13.6) | TC-6F | 0/+50 | -10/+50 |
| | LHP-1200XP † | 2-30F0-2-023 | Cool only | 590-640 | 120 | 3.7 | 0.3 | 30(13.6) | 85°F (30°) | 0/+50 | -10/+50 |
| | LHP-1200XP † | 2-3050-2-024 | Cool only | 590-640 | 120 | 3.7 | 0.3 | 30(13.6) | SSR drive | 0/+50 | -10/+50 |
| | LHP-1200XPHC † | 2-3030-3-025 | Heat/Cool | 590-640 | 120 | 3.7 | 0.3 | 30(13.6) | TC-3F | 0/+50 | -10/+50 |
| | LHP-1200XPHC † | 2-3050-3-026 | Heat/Cool | 590-640 | 120 | 3.7 | 0.3 | 30(13.6) | SSR drive | 0/+50 | -10/+50 |

* Unit is set for 5-32 VDC external signal, relay(s) included
† Agency approvals pending; ATEX certification will require full system approval; All specifications subject to change without notice

# LHP-1200

## PERFORMANCE CURVE

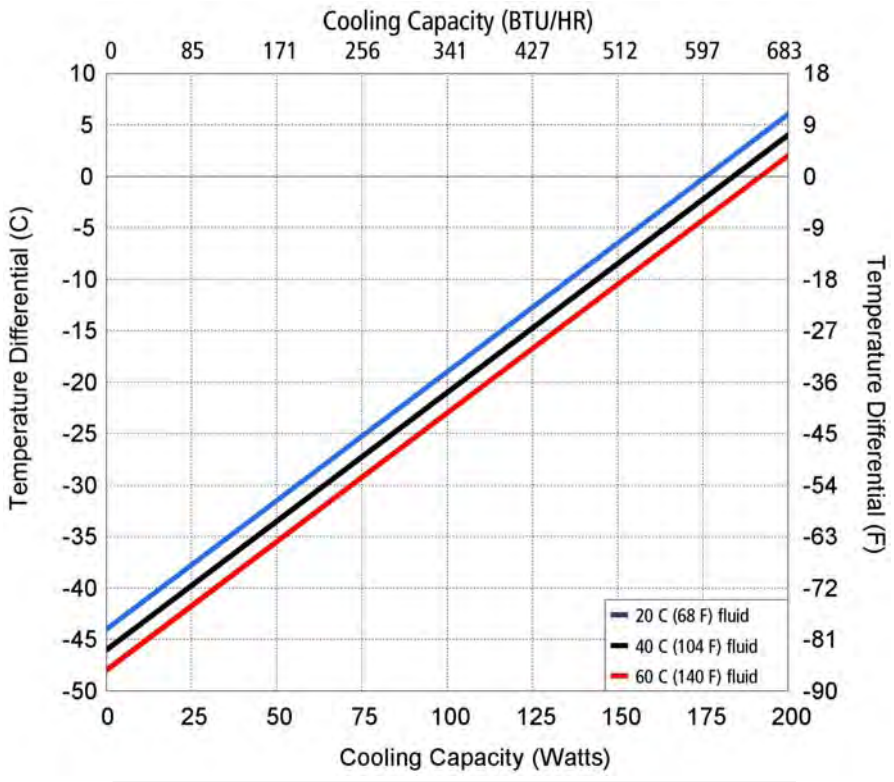


| Equation of line: y=ΔT(°C) x=Capacity (Watts) | | | |
|---|---|---|---|
| **Fluid Temp** | **20°C** | **40°C** | **60°C** |
| Enclosure Air | y=.25x-44.0 | y=.25x-46.0 | y=.25x-48.0 |
| Cold Sink | y=.19x-44.0 | y=.19x-46.0 | y=.19x-48.0 |

### MOUNTING STYLE

Thru Mount

### ENVIRONMENTS SERVED

NEMA-4 IP 56

Class I Div 2 and NEMA-4X IP 56

Class I Div 1 and ATEX Zone 1

### RATING (TRADITIONAL)

613 BTU/hr @ 0 °F ΔT

770 BTU/hr @ +20 °F ΔT *

### RATING (DIN 3168)

180 Watts L35 L35

125 Watts L35 L50

* See page 10

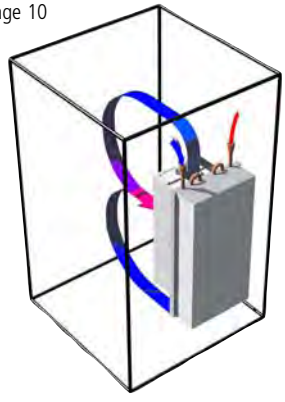

Air Flow Pattern

## DIMENSIONS

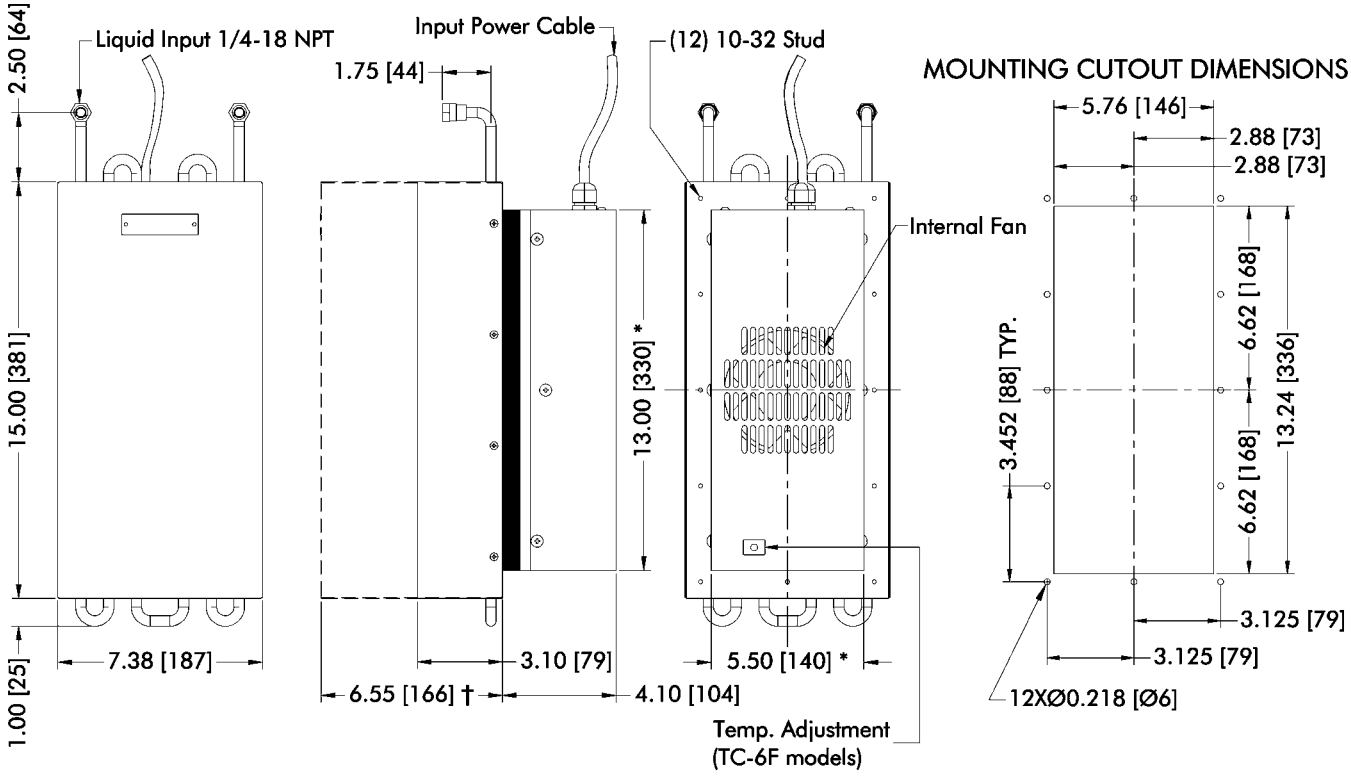


* Dimension does not include hardware. Mounting hardware and gasket included but not shown.

† Dimension applies to XP versions.

Dimensions: Inches [Millimeters]

# LHP-800FF | Liquid Cooled Air Conditioner

# LHP-300FF

General Purpose VDC Input

Liquid Cooled
Thru Mount
NEMA-12

LHP-800FF

LHP-300FF

## FEATURES

- Compact
- Light weight
- Ambient range 0ºC to +70ºC
- No compressor, fluorocarbons or filters
- Adaptable to NEMA-4 and explosion proof applications. Can be mounted entirely inside purged enclosure
- Virtually maintenance-free operation
- Mounts and operates in any orientation

## INCLUDES

- Compression fittings
- Terminal strip for wire hook up

## SPECIFICATIONS LHP-800FF

| MODEL | PART NUMBER | NOTES | PERFORMANCE RATING BTU/HR | VOLTAGE VDC | CURRENT AMPS. | FAN VOLTAGE VDC | WEIGHT LBS (kg) | COOLANT MIN FLOW GPM | OPERATING AMBIENT/COOLANT TEMPERATURE RANGE °C | OPERATING ENCLOSURE TEMPERATURE RANGE °C |
|---|---|---|---|---|---|---|---|---|---|---|
| LHP-800FF | 2-5095-0-000 | Cool only | 460-540 | 24 | 14 | 24 | 6(2.7) | 0.3 | 0/+70 | -10/+60 |
| LHP-800FFHC | 2-5099-1-000 | Heat/Cool | 460-540 | 24 | 14 | 24 | 6(2.7) | 0.3 | 0/+70 | -10/+60 |

Note: No provision for temperature control is included. Consult factory for options.

See also , "Power Supplies" , P. 141

## SPECIFICATIONS LHP-300FF

| MODEL | PART NUMBER | NOTES | PERFORMANCE RATING BTU/HR | VOLTAGE VDC | CURRENT AMPS. | HEAT WATTS | WEIGHT LBS (kg) | COOLANT MIN FLOW GPM | OPERATING AMBIENT/COOLANT TEMPERATURE RANGE °C | OPERATING ENCLOSURE TEMPERATURE RANGE °C |
|---|---|---|---|---|---|---|---|---|---|---|
| LHP-300FF | 2-7098-0-000 | Cool only | 150-175 | 12/24 | 12/6 | N/A | 2.75(1.25) | 0.3 | 0/+70 | -10/+60 |
| LHP-300FFHC | 2-7095-1-000 | Heat/Cool | 150-175 | 24 | 6 | 75 | 2.75(1.25) | 0.3 | 0/+70 | -10/+60 |

Note: No provision for temperature control is included. Consult factory for options.

See also , "Power Supplies" , P. 141

## PERFORMANCE CURVE

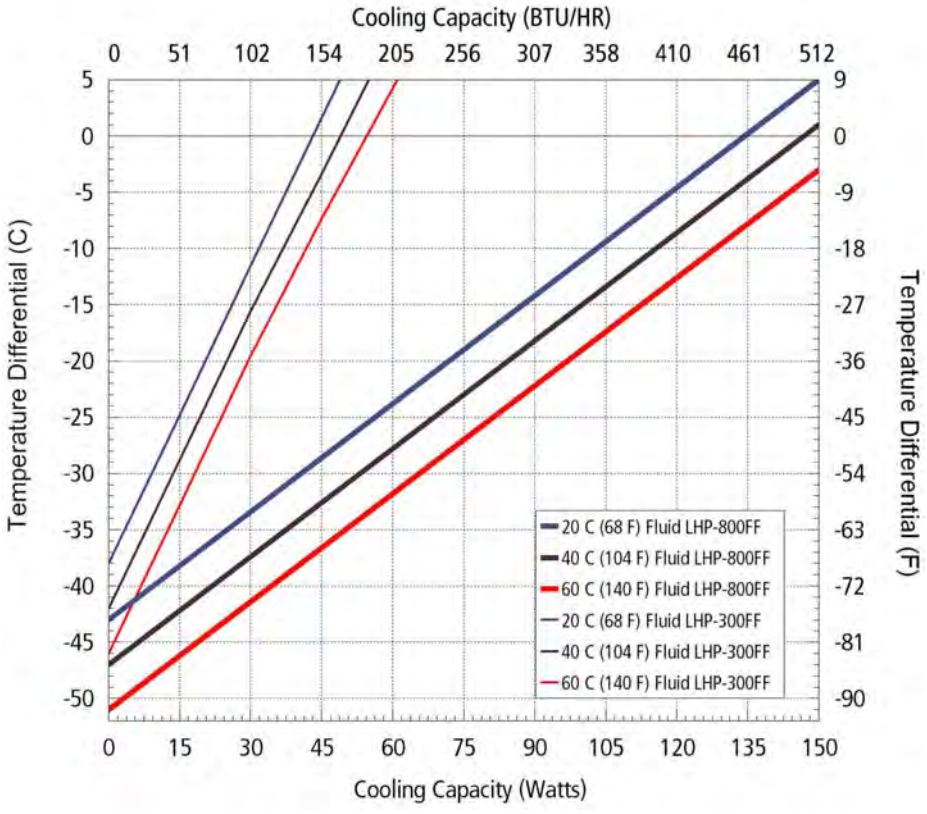


**Equation of line: y=ΔT(°C) x=Capacity (Watts)**

| Fluid Temp | 20°C | 40°C | 60°C |
|---|---|---|---|
| LHP-800FF | y=.32x-43.0 | y=.32x-47.0 | y=.32x-51.0 |
| LHP-300FF | y=.88x-38.0 | y=.88x-42.0 | y=.88x-46.0 |

# LHP-800FF

**MOUNTING STYLE**

Internal

**RATING (TRADITIONAL)**

500 BTU/hr @ 0 °F ΔT

615 BTU/hr @ +20 °F ΔT *

**RATING (DIN 3168)**

146 Watts L35 L35

105 Watts L35 L50

# LHP-300FF

**MOUNTING STYLE**

Internal

**RATING (TRADITIONAL)**

160 BTU/hr @ 0 °F ΔT

200 BTU/hr @ +20 °F ΔT *

**RATING (DIN 3168)**

48 Watts L35 L35

34 Watts L35 L50

* See page 10

## DIMENSIONS

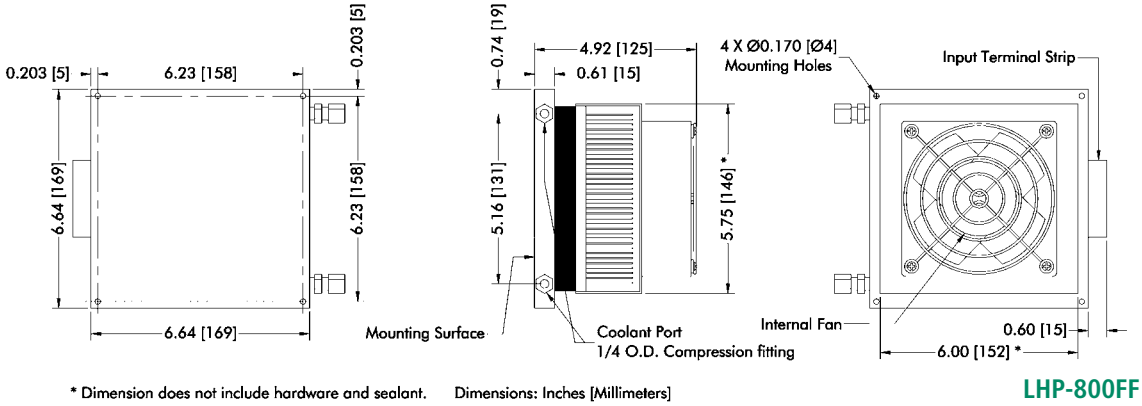


* Dimension does not include hardware and sealant. Dimensions: Inches [Millimeters]

**LHP-800FF**

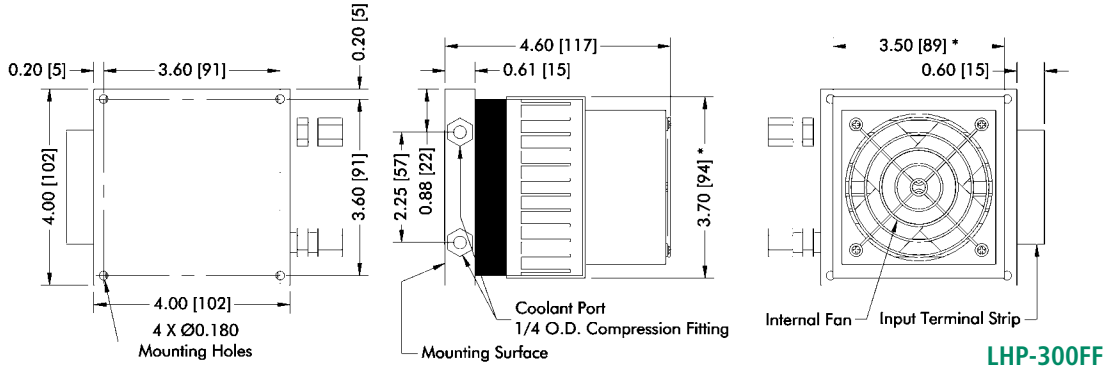


* Dimension does not include hardware and sealant. Dimensions: Inches [Millimeters]

**LHP-300FF**

# Cold Plates

**140-1630 BTU/hr**

AIR COOLED

## AHP-CPV SERIES LABORATORY USE

### STANDARD

- Integral front panel temperature control
- Bench top design
- Universal input 100-240 VAC
- External RTD sensor capable
- RS-232 Comms with EzLog programming and logging
- Multi step ramp & soak
- Auto tuning for best control
- Heating to 90 °C
- Cooling to -15 °C
- Cascade accessory to -40 °C and lower
- Many standard and custom accessories
- Internal RTD standard

AIR COOLED

## AHP-CP SERIES GENRAL PURPOSE

### FEATURES

- VAC & VDC versions
- Industrial & OEM use
- Cooling to -15/-20 °C
- Strong mounting on or through bench/wall
- Optional heating
- Remote temperature control versions
- Sturdy, durable construction
- Modification and custom units to fit your requirements

LIQUID COOLED

## LHP-SERIES

### FEATURES

- No load cooling to -25°C (25°C Fluid)
- Optional heating
- Temperature control, optional
- Low maintenance
- No compressor, fluorocarbons or filters
- Compact
- Lightweight
- Durable
- Reliable

TEAM TECA
CUSTOM
ENGINEERING
Call us at 888-TECA-USA.
We're here to help!

# COLD PLATES

## Air Cooled

## Liquid Cooled

### AIR COOLED CPV

**AHP-1200CPV** page 82

830-950 BTU/hr rating,
15" x 11.3" x 6.5" size,
5.38" X 13" cold plate surface,
100-240 VAC

**AHP-301CPV** page 86

225-265 BTU/hr rating,
10" x 9.8" x 6" size,
4.5" x 6" cold plate surface,
100-240 VAC

**AHP-1200DCP** page 84

Dual temperature zone
cold/hot plates
18.5" X 15.1" X 6.5" size
(2) 13.3" X 6.3" plate surface
100-240 VAC

**AHP-800MSP** page 88

Variable stirring rate,
19" x 9.3" x 10" size,
1 Liter standard bottle,
100-240 VAC

### AIR COOLED CP

**AHP-1200CP** page 96

830-950 BTU/hr rating,
15" x 7.3" x 5" size,
5.38" X 13" cold plate surface,
120, 240 VAC or 24 VDC operation

**AHP-301CP** page 100

225-265 BTU/hr rating,
10" x 9.8" x 6" size,
4.5" x 6" cold plate surface,
120 or 240 VAC operation

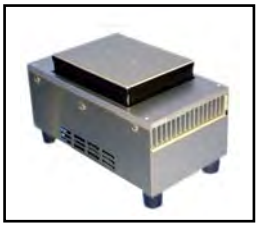

**AHP-300CP** page 102

290-330 BTU/hr rating,
10" X 5.4" X 4.1" size,
4.5" X 6" cold plate surface
12/24/48 VDC operation

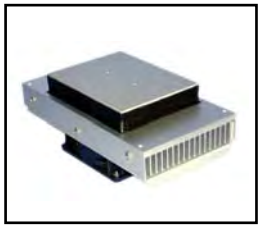

**AHP-150CP** page 102

140-160 BTU/hr rating,
7" X 5" X 3.9" size,
2" X 3.5" cold plate surface
12/24 VDC operation

### LIQUID COOLED

**LHP-1700CP** page 104

1360-1630 BTU/hr rating,
19" x 8.7" x 5" size,
6.00" x 12.88" cold plate
120 or 240 VAC operation

**LHP-1200CP** page 106

887 BTU/hr rating,
15" x 7.4" x 4" size,
13.00" x 5.38" cold plate
24 VDC operation

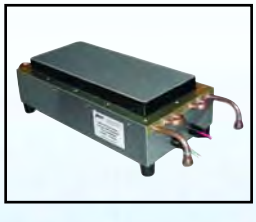

**LHP-800CP** page 108

700-830 BTU/hr rating,
6.6 " x 6.6" x 1.75" size,
6" x 6" cold plate surface,
24 VDC operation

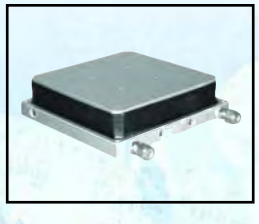

**LHP-300CP** page 108

280-335 BTU/hr rating,
4 " x 4" x 1.63" size,
3.5" x 3.5" cold plate surface,
12/24 VDC operation

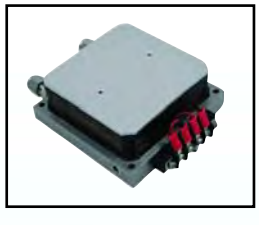

**LHP-150CP** page 108

130-160 BTU/hr rating,
4 " x 2" x 1.63" size,
2" x 3.2" cold plate surface,
12 VDC operation

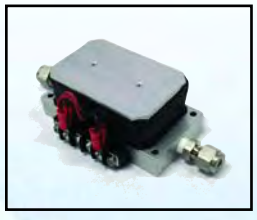

# AHP-1200CPV | Versatile Cold/Hot Plate

Air Cooled
Bench Top

100-240 VAC Input

## FEATURES

- Precision machined cold plate surface
- Easy clean stainless steel top surface
- Cools and heats (TYP. -20 °C to 90 °C)
- 100-240 VAC universal input
- Low-profile design with ergonomic sloped front
- Variable fan speed for quieter operation
- Weighs only 25 lbs. (11.4 kg)
- Compact bench top unit, 11.2" X 15.1" footprint
- Virtually maintenance-free operation
- Painted Enameled stainless steel exterior housing
- Accessories for glassware (beaker/test tube) cooling

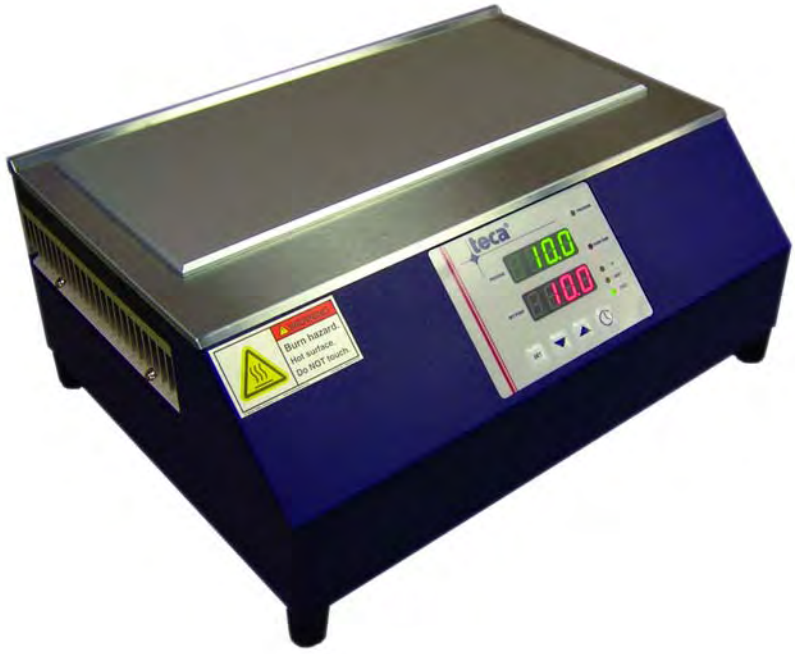


## CONTROL FEATURES

- Integral TC-4300 PID "tunable" temperature control
- One shot smart PID control tuning or Adaptive Smart Continuous Tuning
- EasyLog software for easy programming, tuning, charting and data acquisition
- Heating and Cooling
- Internal RTD sensor
- Remote Sensibility™ switchable exterior sensor
- Multi-segment ramp and soak programmable (4X8 or 2X16 or 1X32 segments)
- RS-232 communications

## SPECIFICATIONS

| MODEL | PART NUMBER | NOTES | COLD PLATE | PERFORMANCE RATING BTU/HR | VOLTAGE VAC 50/60 HZ | CURRENT AMPS. | WEIGHT LBS. (KG) | TEMP. CONTROL | OPERATING AMBIENT °C |
|---|---|---|---|---|---|---|---|---|---|
| AHP-1200CPV | 9-34EB-1-0A0 | Standard | Smooth Surface | 680-720 | 100-240 | 2.5† | 25 (11.4) | TC-4300 | 0-50 |
| AHP-1200CPV | 9-35EB-1-0A0 | High capacity | Smooth Surface | 780-840 | 100-240 | 3.5† | 25 (11.4) | TC-4300 | 0-50 |
| AHP-1200CPV | 9-34E5-1-0A0 | Standard | Smooth Surface | 680-720 | 24 VDC | 9.0 | 25 (11.4) | TC-4300 | 0-50 |
| AHP-1200CPV | 9-35E5-1-0A0 | High capacity | Smooth Surface | 780-840 | 24 VDC | 17 | 25 (11.4) | TC-4300 | 0-50 |
| AHP-1200CPV | 9-34EB-1-TAP | Standard | Tap Pattern | 680-720 | 100-240 | 2.5† | 25 (11.4) | TC-4300 | 0-50 |
| AHP-1200CPV | 9-35EB-1-TAP | High capacity | Tap Pattern | 780-840 | 100-240 | 3.5† | 25 (11.4) | TC-4300 | 0-50 |
| AHP-1200CPV | 9-34E5-1-TAP | Standard | Tap Pattern | 680-720 | 24 VDC | 9.0 | 25 (11.4) | TC-4300 | 0-50 |
| AHP-1200CPV | 9-35E5-1-TAP | High capacity | Tap Pattern | 780-840 | 24 VDC | 17 | 25 (11.4) | TC-4300 | 0-50 |
| AHP-1200CAS* | 9-35EB-1-CAS* | High capacity for Cascades | Tap Pattern | 780-840 | 100-240 | 4.0† | 25 (11.4) | TC-4300 | 0-50 |

* This part number is ready for use with a low temperature cascade option and includes CH-1200 hinged cover, CC-1200 rear panel for cascade power up and control, refer to pages 92 and 93 for information on cascades and other available options.

† Refelects the current draw @ 120 VAC, 60 Hz input

Many options and accessories available see pages 90-95

# AHP-1200CPV

**ENVIRONMENTS**

Bench top
Laboratory
Industrial

**COOLING CAPACITY**

200 - 230 Watts @ 0 °C ΔT

## PERFORMANCE CURVE

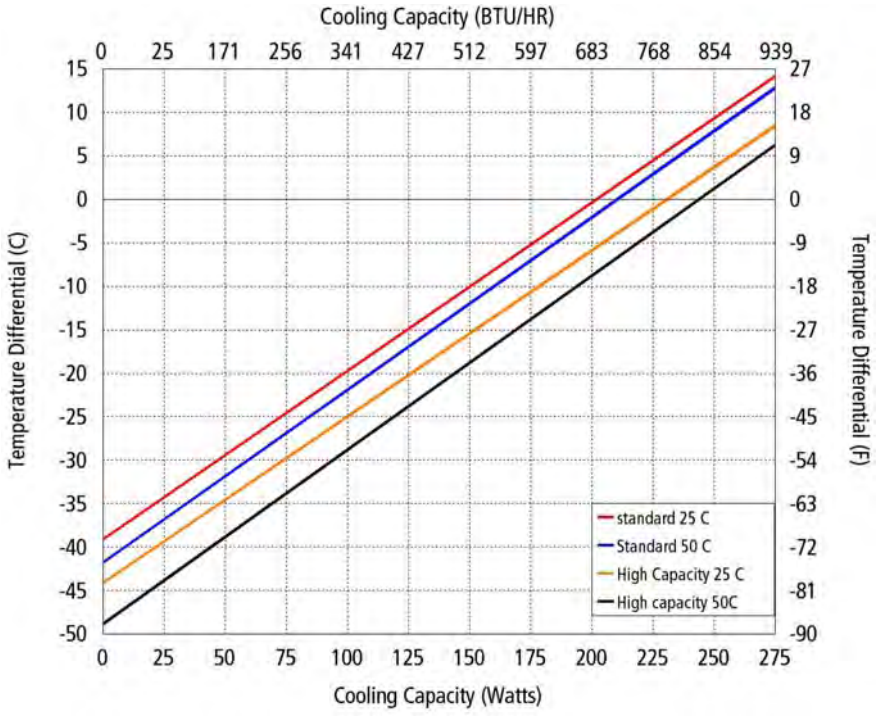


| Equation of line: y=ΔT(°C) x=Capacity (Watts) | | |
|---|---|---|
| **Ambient Temp** | **25°C** | **50°C** |
| Standard | y=.195x-39.1 | y=.195x-41.8 |
| High capacity | y=.185x-44.9 | y=.185x-48.8 |

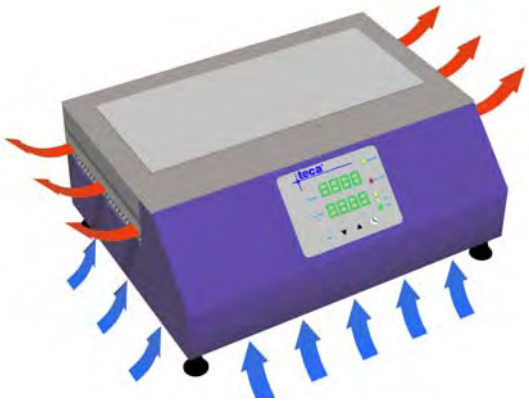

Ambient Air Path

## DIMENSIONS

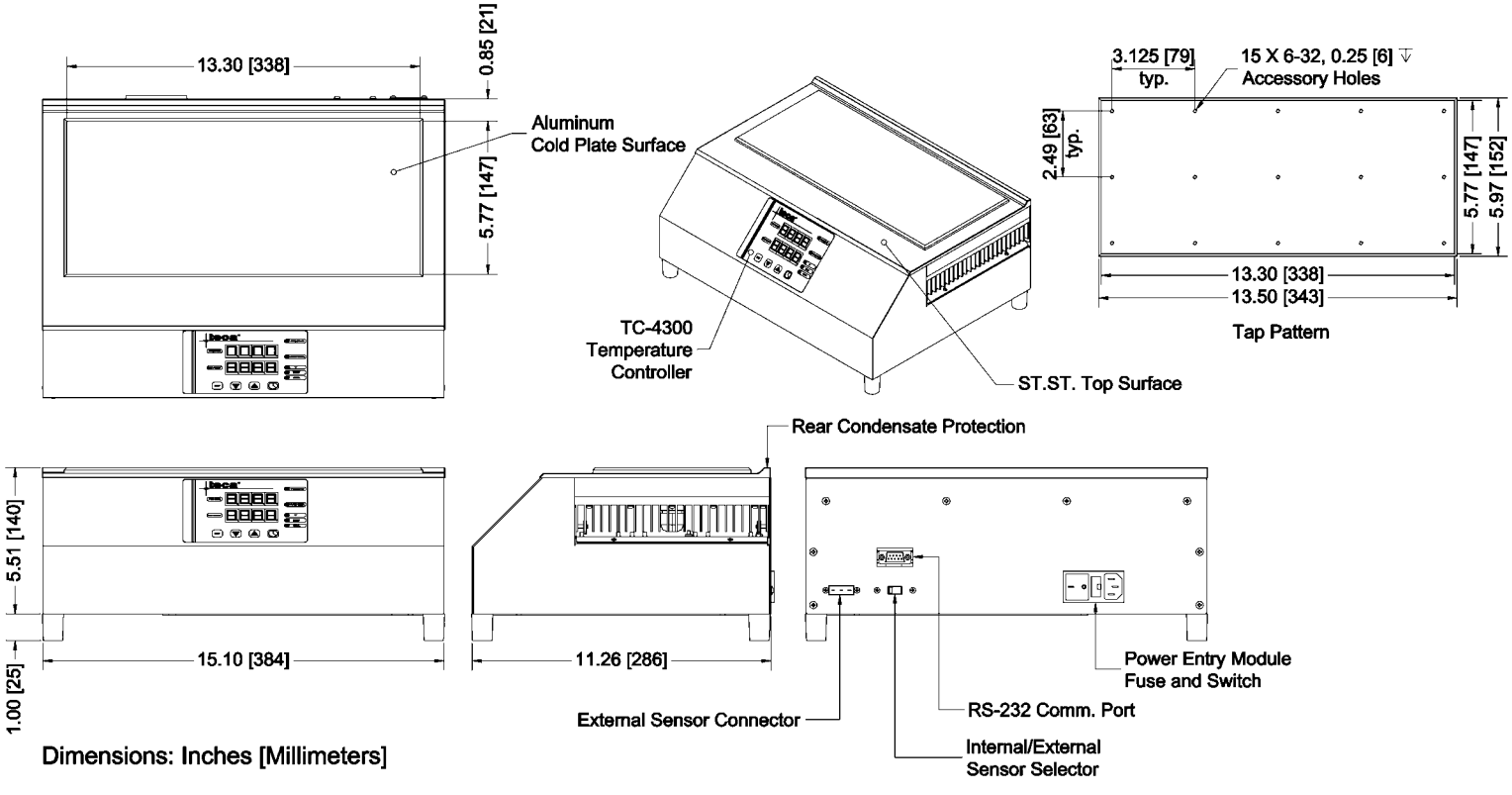


Dimensions: Inches [Millimeters]

# AHP-1200DCP | Dual Temperature Zone Plate

Air Cooled
Bench Top

100-240 VAC Input

## FEATURES

- Cools and heats two plates independently
- 100-240 VAC universal input
- Low-profile design with ergonomic sloped front
- Variable speed fans for quiet operation
- Compact bench top unit, 18.5" X 15.1" footprint
- No compressor, fluorocarbons or filters.
- Virtually maintenance-free operation
- Painted Enameled stainless steel exterior housing
- Rubber feet
- Two precision machined cold plate surfaces, each 13.3" X 6.3"
- Large 13.5" x 12.6" overall plate area
- Adaptable to various surfaces/coverings

## APPLICATIONS

- Behavior Studies
- Habitat studies
- Pain Threshold Studies
- Temperature Range Studies
- Heat/Cold Sensitivity
- Temperature Differential Testing
- Long Term Temperature Exposure
- Heat/Cold Discrimination
- Heat/Cold Transient Studies
- Specimen Storage/Temperature Maintenance
- Histology Sample Preparation
- General Laboratory Cold Plate Use
- See pages 94-95 for accessories

## CONTROL FEATURES

- Independent TC-4300 PID "tunable" temperature controllers
- One shot smart PID control tuning or Adaptive Smart Continuous Tuning
- Heating and Cooling
- Internal RTD sensor
- Remote Sensibility™ switchable exterior sensor
- Multi-segment ramp and soak programmable
- RS-232 communications
- Software for programing, charting and data acquisition

## SPECIFICATIONS

| MODEL | PART NUMBER | NOTES | PLATE CONFIGURATION | PERFORMANCE RATING BTU/HR | VOLTAGE VAC 50/60 HZ | CURRENT AMPS. | WEIGHT LBS. (KG) | TEMP. CONTROL | OPERATING AMBIENT °C |
|---|---|---|---|---|---|---|---|---|---|
| AHP-1200DCP | 9-34EB-1-0A1 | Heat/Cool | Smooth Surface | 670-800 | 100-240 | 2.5-5.0 | 50 (22.7) | TC-4300 | 0-40 |
| AHP-1200DCP | 9-34EB-1-TA1 | Heat/Cool | Tap Pattern | 670-800 | 100-240 | 2.5-5.0 | 50 (22.7) | TC-4300 | 0-40 |

# AHP-1200DCP

**ENVIRONMENTS**

Bench top
Laboratory
Industrial

**COOLING CAPACITY (individual plate)**

200 - 240 Watts @ 0 °C ΔT

**COOLING CAPACITY (combined)**

400 - 480 Watts @ 0 °C ΔT

## PERFORMANCE CURVE

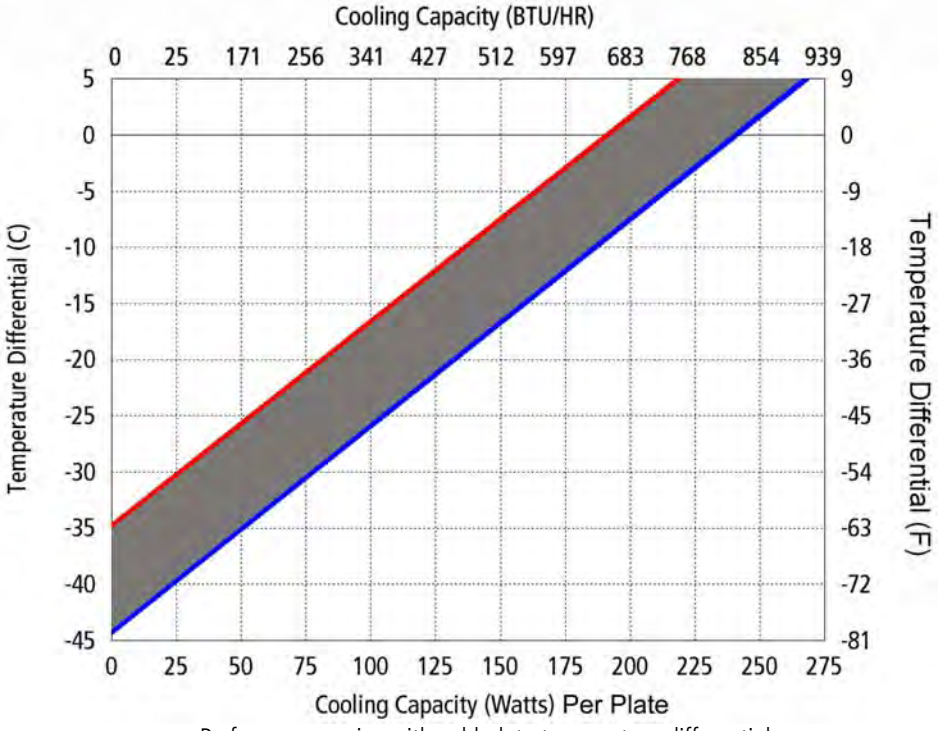


Performance varies with cold plate temperature differential.
Performance curve is for one cold plate at an ambient of 25 °C.
Performance of one cold plate will vary with the temperature of the other cold plate.

Ambient Air Path

## DIMENSIONS

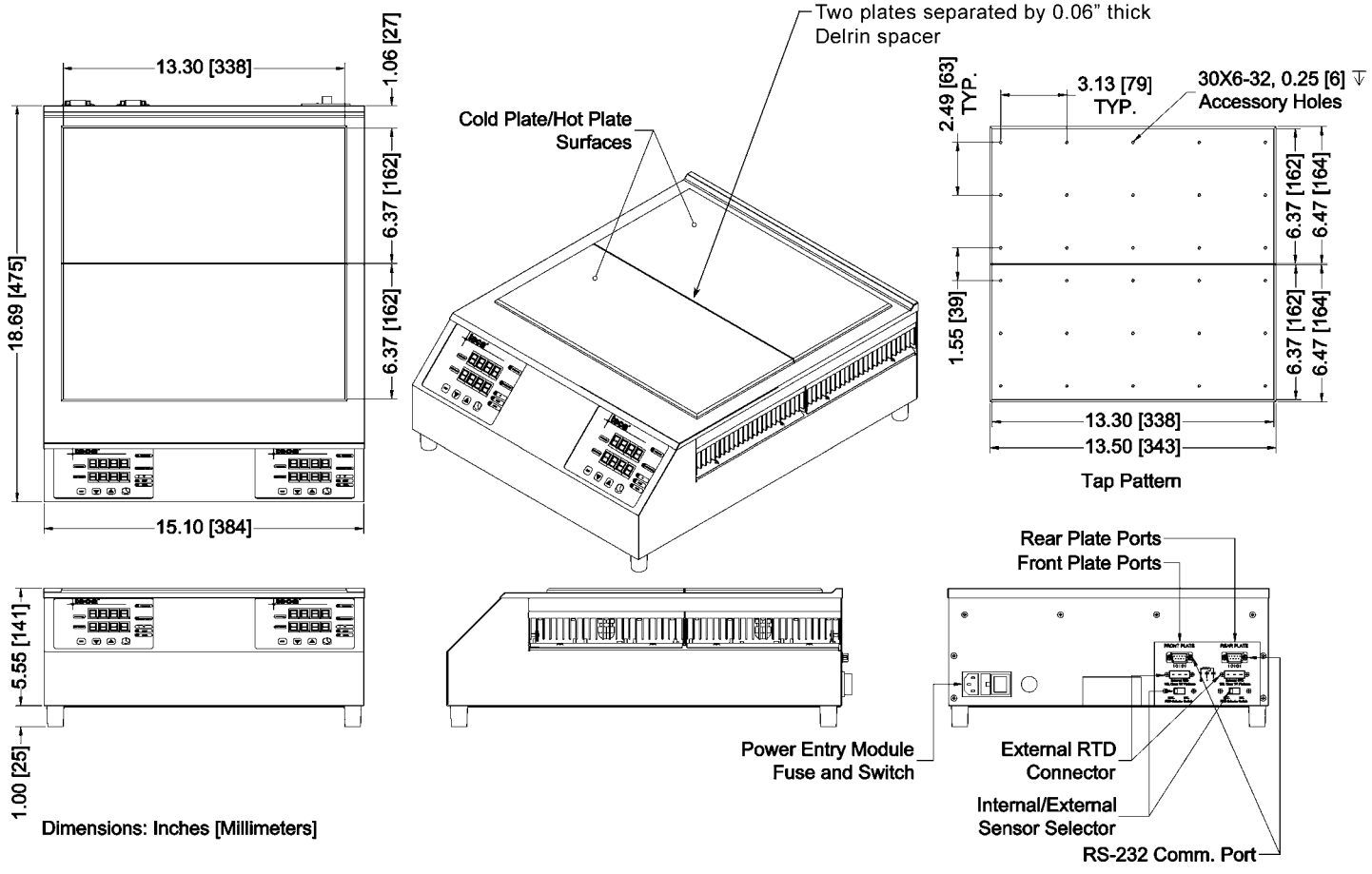


Dimensions: Inches [Millimeters]

# AHP-301CPV | Versatile Cold/Hot Plate

Air Cooled
Bench Top

100-240 VAC Input

## FEATURES

- Precision machined cold plate surface
- Easy clean stainless steel top surface
- Cools and heats (TYP. -20 °C to 90 °C)
- 100-240 VAC universal input
- Low-profile design with ergonomic sloped front
- Weighs only 13 lbs. (5.9 kg)
- Compact bench top unit, 9.8" X 10.1" footprint
- No compressor, fluorocarbons or filters.
- Virtually maintenance-free operation

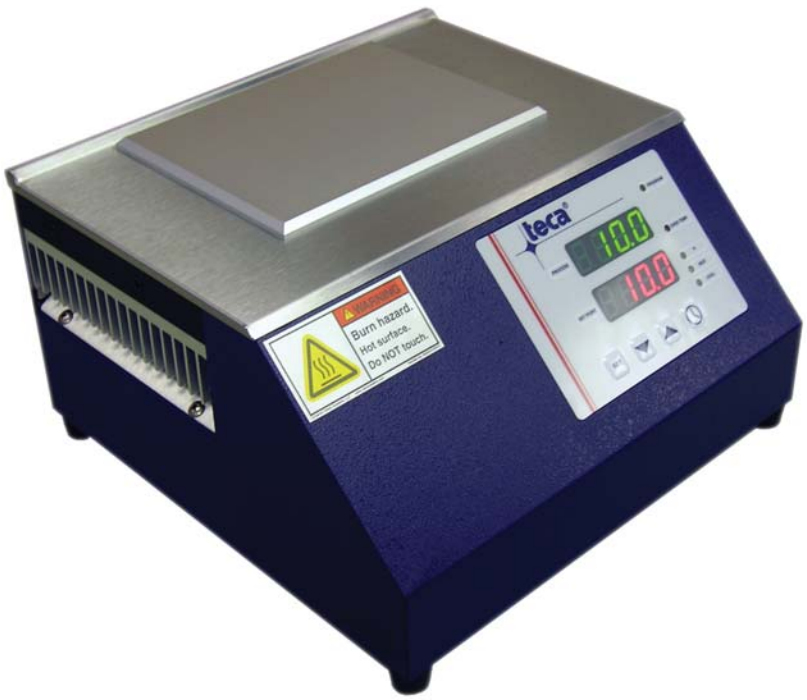


## CONTROL FEATURES

- Integral TC-4300 PID "tunable" temperature control
- One shot smart PID control tuning or Adaptive Smart Continuous Tuning
- EasyLog software for easy programming, tuning, charting and data acquisition
- Heating and Cooling
- Internal RTD sensor
- Remote Sensibility™ switchable exterior sensor
- Multi-segment ramp and soak programmable (4X8 or 2X16 or 1X32 segments)
- RS-232 communications

## SPECIFICATIONS

| MODEL | PART NUMBER | COLD PLATE | PERFORMANCE RATING BTU/HR | VOLTAGE VAC 50/60 HZ | CURRENT AMPS. | WEIGHT LBS. (KG) | TEMP. CONTROL | OPERATING AMBIENT °C |
|---|---|---|---|---|---|---|---|---|
| AHP-301CPV | 9-70EB-1-0A0 | Smooth Surface | 260-280 | 100-240 | 2.0* | 13 (5.9) | TC-4300 | 0-45 |
| AHP-301CPV | 9-70E5-1-0A0 | Smooth Surface | 260-280 | 24 VDC | 7.0 | 13 (5.9) | TC-4300 | 0-45 |
| AHP-301CPV | 9-70EB-1-TAP | Tap Pattern | 260-280 | 100-240 | 2.0* | 13 (5.9) | TC-4300 | 0-45 |
| AHP-301CPV | 9-70E5-1-TAP | Tap Pattern | 260-280 | 24 VDC | 7.0 | 13 (5.9) | TC-4300 | 0-45 |

* Refelects the current draw @ 120 VAC, 60 Hz input

Many options and accessories available see pages 90-95

# AHP-301CPV

## ENVIRONMENTS

Bench top
Laboratory
Industrial

## COOLING CAPACITY

82 Watts @ 0 °C ΔT

## PERFORMANCE CURVE

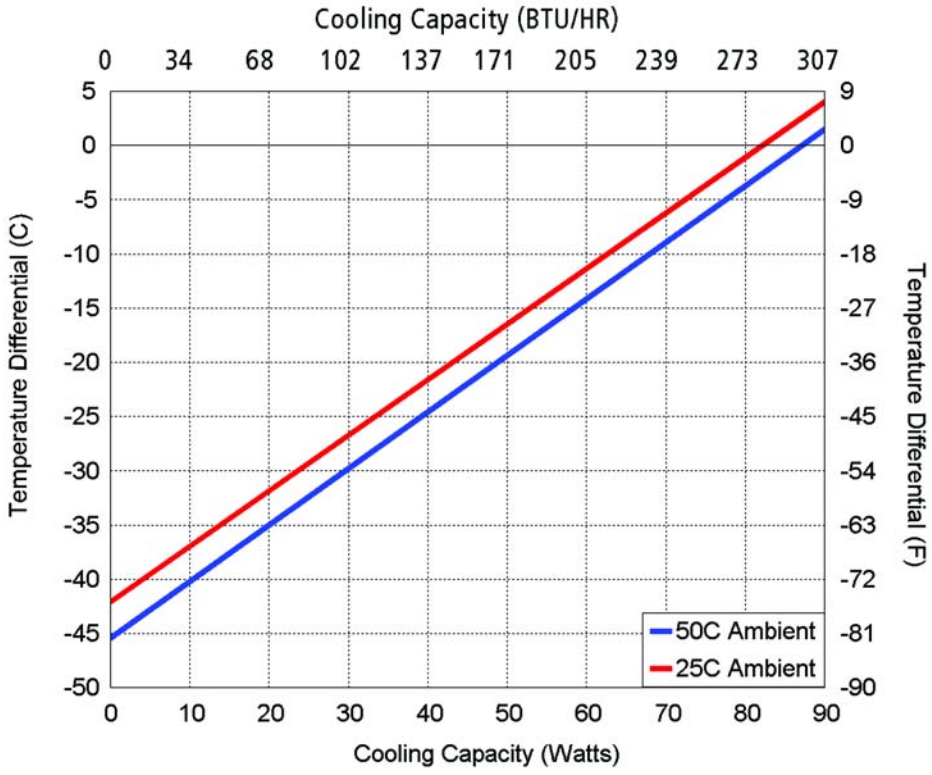


| Equation of line: y=ΔT(°C) x=Capacity (Watts) | | |
|---|---|---|
| **Ambient Temp** | **25°C** | **50°C** |
| Cold Plate | y=.51x-42.1 | y=.51x-45.4 |

Ambient Air Path

## DIMENSIONS

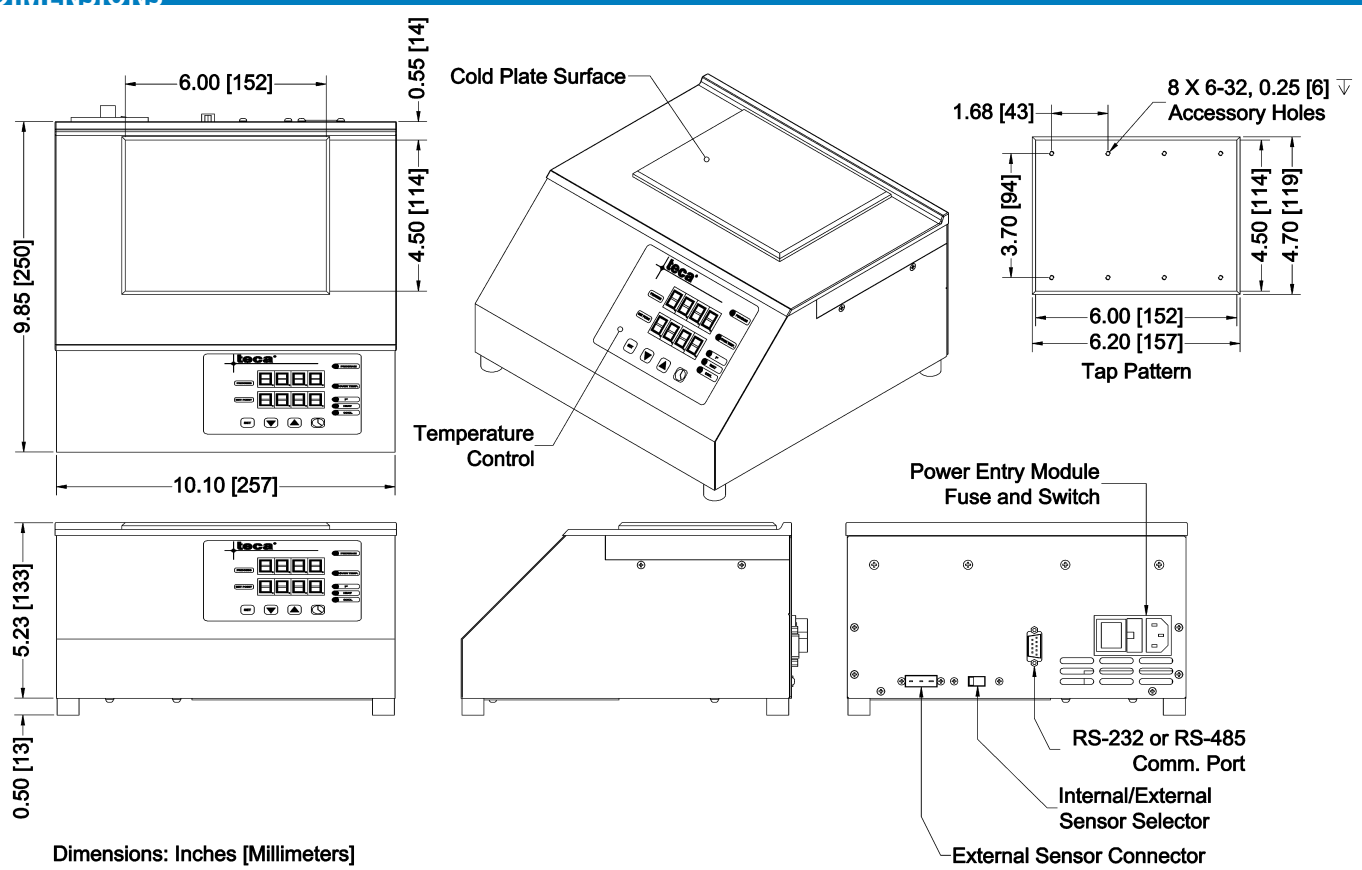


Dimensions: Inches [Millimeters]

# AHP-800MSP | Magnetic Stirring Cold/Hot Plate

Air Cooled
Bench Top

100-240 VAC Input

## FEATURES

- Heating and cooling
- Unique high-performance side mounting cold plate for added cooling and uniform temperatures
- Magnetic drive for stir bars from underneath the bottle
- Magnetic stir offers 5 speed settings
- Configurations for various bottle/beaker sizes
- 100-240 VAC universal, Integral power supply
- Power input cord set
- Weighs only 38 lbs. (17.3 kg)
- Compact bench-top design
- No compressor, fluorocarbons or filters
- Virtually maintenance-free operation
- Painted stainless steel exterior housing
- Removable bottle block for different size bottles or beakers

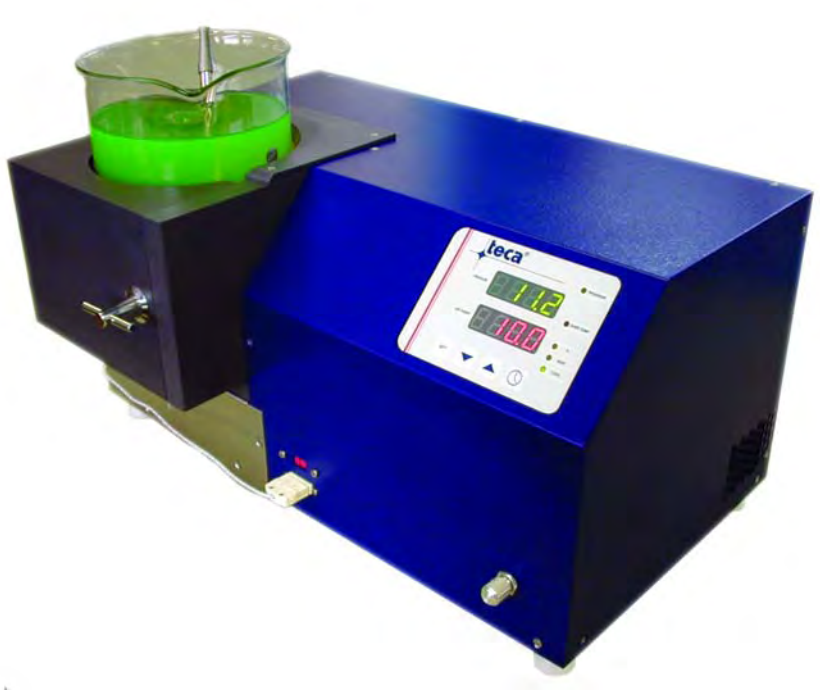


## INCLUDES

- Integral PID "tunable" temperature control
- One shot smart PID control tuning or Adaptive Smart Continuous Tuning
- Internal RTD sensor
- Remote Sensibility™ switchable exterior RTD sensor
- Multi-segment ramp and soak programs
- RS-232 communications
- i-tools software for easy programming and control tweaking
- Optional software for charting and data acquisition
- Stock bottle block for 3 liter beaker (6" diameter)

## APPLICATIONS

Laboratory or industrial environments. Testing of specimens, drugs and industrial chemicals. Process testing. Quality control.

## SPECIFICATIONS

| MODEL | PART NUMBER | NOTES | VOLTAGE VAC 50/60 HZ | CURRENT AMPS. | WEIGHT LBS. (KG) | TEMP. CONTROL | OPERATING AMBIENT °C |
|---|---|---|---|---|---|---|---|
| AHP-800MSP | 9-50EB-1-001 | Heat/Cool | 100-240 | 1.7-4.8 | 38 (17.3) | TC-4300 | 0-45 |

# AHP-800MSP

**ENVIRONMENTS**

Bench top
Laboratory
Industrial

## PERFORMANCE CURVE

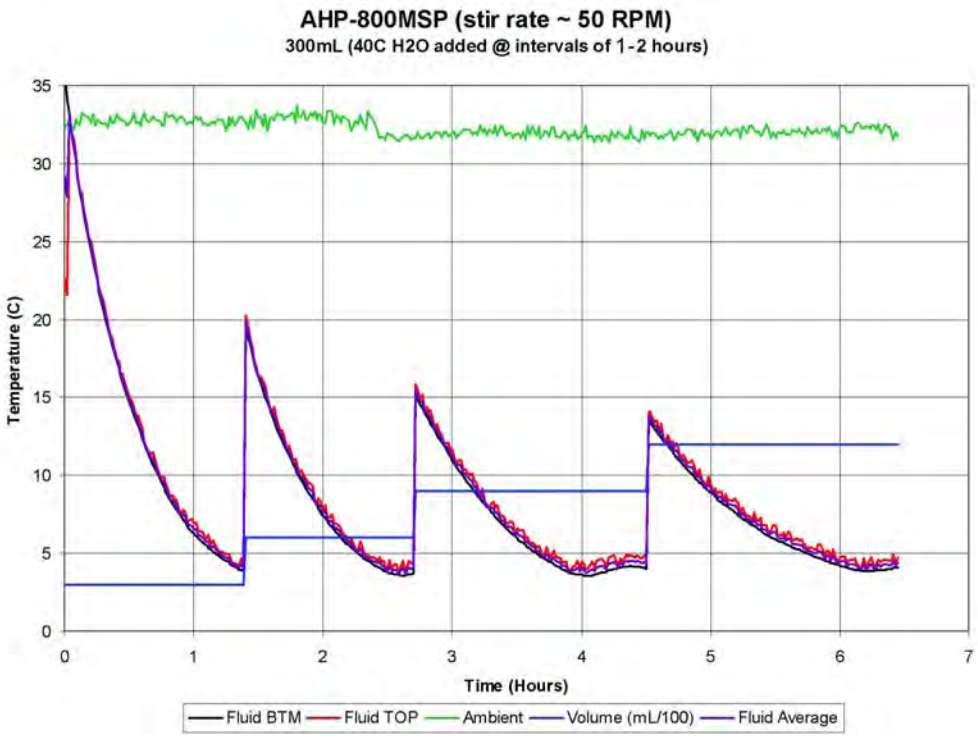


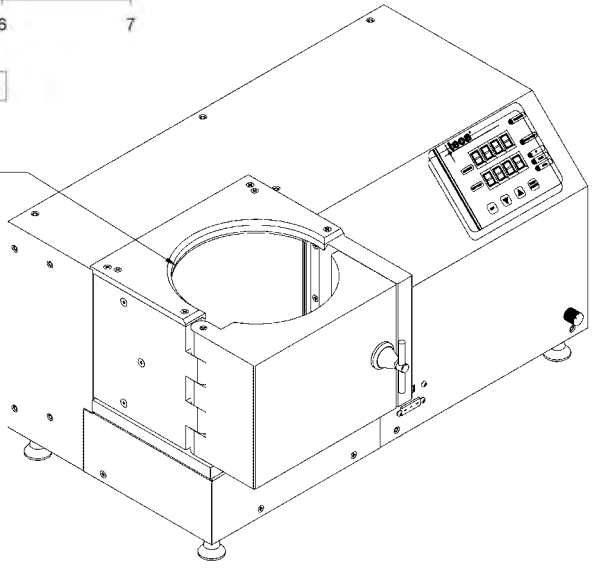


The AHP-800MSP has a removable "bottle block" that makes it adaptable to different size bottles and beakers. Swap different bottle blocks for different diameter vessels.
The stock version holds a 3 liter beaker (reference VWR # 89090-522)
Tell us your required diameter and we will design one for you.

## DIMENSIONS

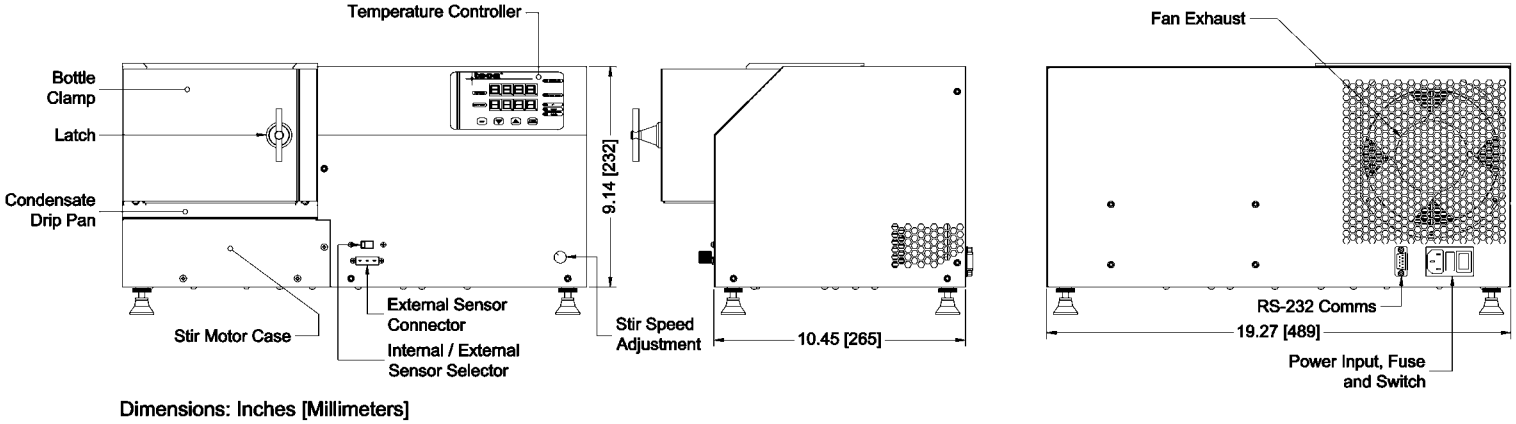


Dimensions: Inches [Millimeters]

# CPV | Thermal Gradient Bar

Thermal Gradient Bar

## OVERVIEW

TECA's Gradient Bar options expand the use of the CPV line of Cold Plates. With a TECA model CPV cold plate at each end the gradient bar has programmable gradient areas with near linear gradients between the two ends and near uniform temperatures along the width of the bar. The temperature at each end of the gradient area can be programmed to a single set point or with a ramp/step and soak profile creating constant, expanding, contracting or moving gradients. Set the gradient profile to be large for initial observations then adjust the end set points to zoom in on a temperature range of interest. The temperature at the end of the gradient area is measured from underneath the plate at approximately .05 from the surface leaving the top gradient area clean and smooth. Optional external surface sensors can be used to change the size of the gradient area.

## FEATURES

- Near Linear Temperature Gradient differentials from 2C to 30C
- Independent Temperature Set points
- Includes two bottom mounted 3 wire RTD sensors
- Programmable set points, step or ramp changes
- Fixed or adjustable gradient areas
- Gradients above and below ambient
- Bench top
- Air Cooled
- Anodized aluminum surface
- Used with model AHP-301CPV or AHP-1200CPV units
- Custom sizes available
- Custom Acrylic covers and barriers available
- End Temperatures from -10C (minimal ΔT) to 70C (ΔT of 45C)

Two AHP-301CPV, 10" X 6" Gradient Plate, covered, 40C to 20C

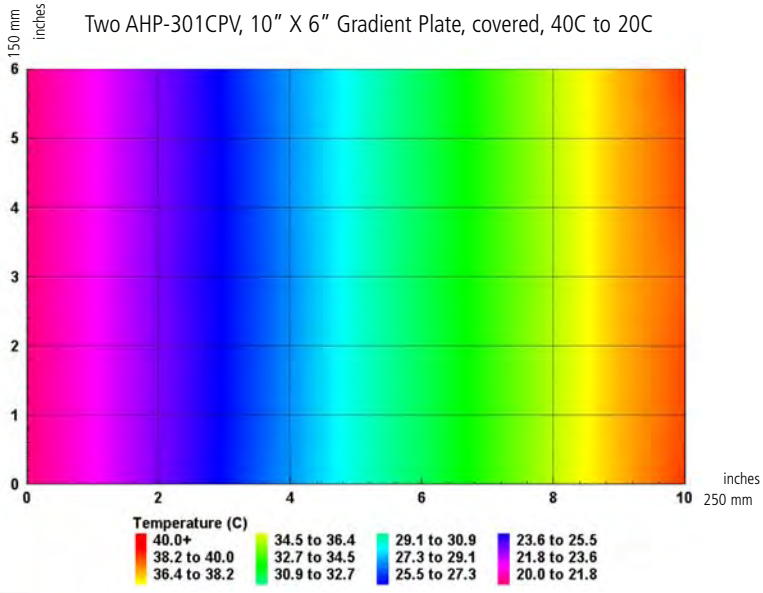


## TEMPERATURE STUDY APPLICATIONS

- Insects
- Mammals
- Micro-organisms
- Plants
- Chemicals
- Incubation
- At rest
- Feeding
- Preference
- Soil Biochemistry
- Root Growth
- Seed Germination
- Film forming
- Paints
- Adhesives
- Melting Points
- More

## SPECIFICATIONS

| MODEL | GRADIENT PLATE SIZE (L X W X H) mm | GRADIENT AREA | FINISH | USE WITH 2 Each | EMBEDED SESNSOR |
|---|---|---|---|---|---|
| TGB-2515 | 558 X 150 X 25 | 250 X 150 | Clear anodize | AHP-301CPV or AHP-1200 CPV | 3 WIRE RTD |
| TGB-5030 | 914 X 300 X 25 | 500 X 300 | Clear anodize | AHP-1200CPV | 3 WIRE RTD |

## TEMPERATURE RANGE CURVES

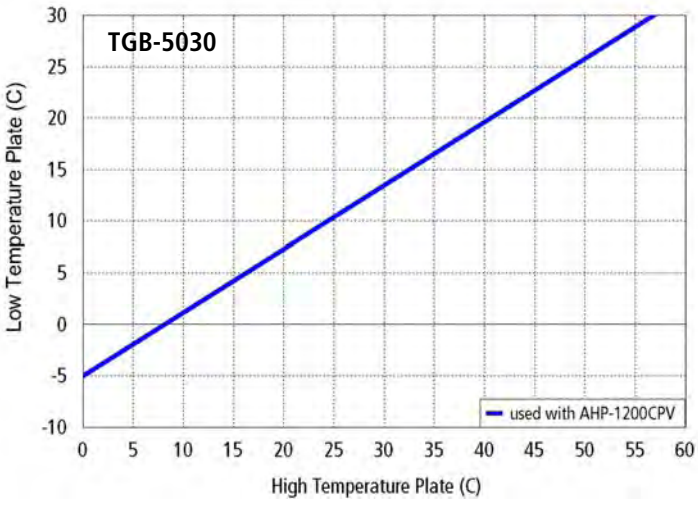


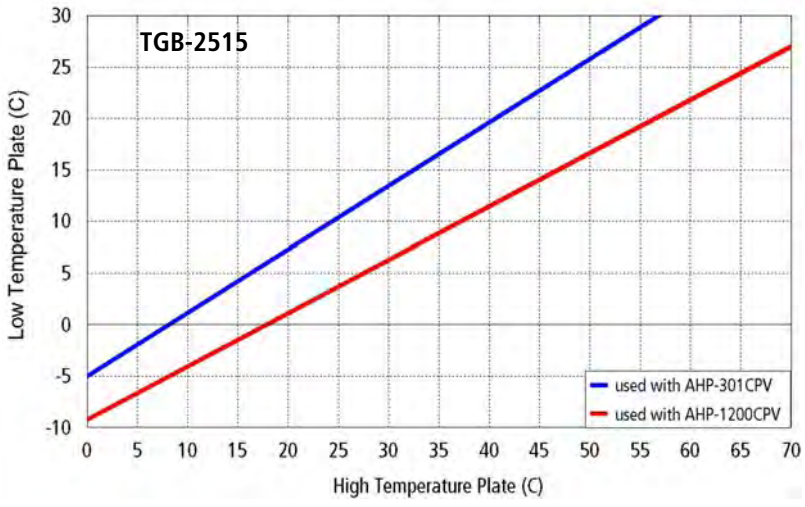


**How to use the curves to help determine the maximum gradient delta T.**

On the X-axis find the temperature you want to hold on one end of the gradient.

Extend a vertical line up until you meet the characteristic line of your preferred gradient plate/CPV combination.

Extend a horizontal line to the Y-Axis to find the temperature you can hold on the other end of the gradient plate.

The difference between the two temperatures is the maximum delta T you can expect across the gradient plate under your defined conditions.

The curves shown, are test results in a 20 C ambient non condensing and the gradient area covered by an acrylic cover.

## DIMENSIONS

TGB-5030

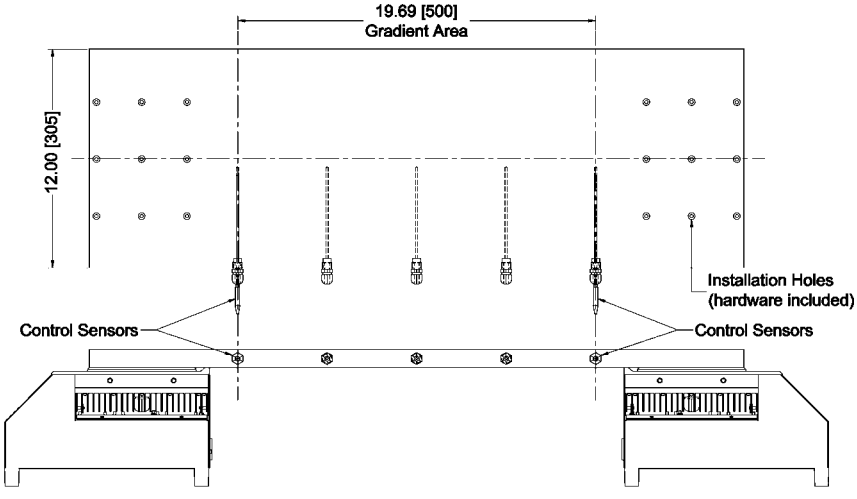


Gradient plate shown with two AHP-1200CPV

TGB-2515

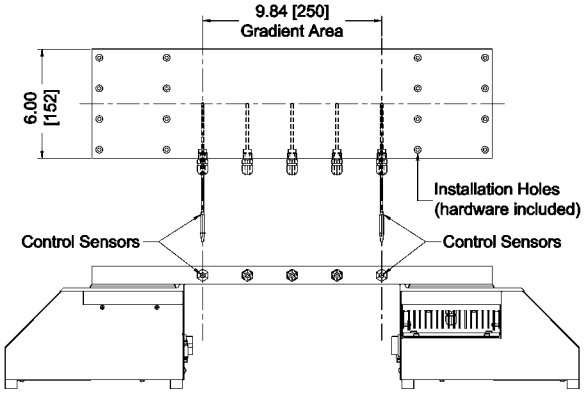


Gradient plate shown with two AHP-301CPV

Dimensions: Inches [Millimeters]

## LOW TEMPERATURE CASCADES

One thermoelectric stacked on top of another with the goal of increasing the maximum temperature differential is a "cascade". These cascade assemblies are mounted to the model **AHP-1200CAS Part # 9-35EB-1-CAS** (see page 76) cold plate to create 2 and 3 stage cascades.
The performance curves shown are actual tests run under very well insulated conditions.
The performance will vary with the degree of insulation, with the amount of the active load and with the ambient temperature.

## INCLUDED WITH AHP-1200CAS

- All the features of AHP-1200CPV series (see page 76)
- Tap pattern for installation of cascades
- Rear panel controlled power output for cascades
- Clear acrylic hinged cover

## INCLUDED WITH CASCADES

- Mounting hardware
- Power input leads
- Thermally conductive substrate pad
- Precision machined cold plate surfaces
- Embedded RTD sensor and connector for use with **AHP-1200CAS**

AHP-1200CAS with CCP-31 3 Stage Cascade

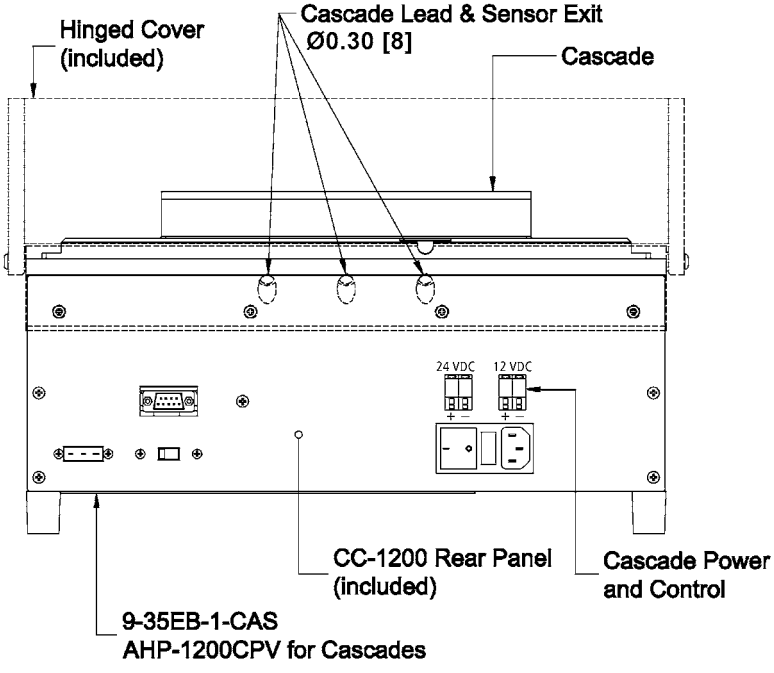

AHP-1200CAS with CCP-21 rear view

## SPECIFICATIONS AHP-300CP

| PART NUMBER | USE WITH | MAX DELTA T AT 25°C AMB. °C | TOP SURFACE AREA inches | VOLTAGE VDC | CURRENT AMPS | TEMP. CONTROL | OPERATING AMBIENT °C | STAGES |
|---|---|---|---|---|---|---|---|---|
| CCP-22 | AHP-1200CAS | - 58 | 8.75 X 4.5 | 24 | 4.6 | AHP-1200CAS | -10/+70 | 2 |
| CCP-21 | AHP-1200CAS | - 68 | 6 X 3 | 24 | 2.5 | AHP-1200CAS | -10/+70 | 2 |
| CCP-31 | AHP-1200CAS | - 76 | 6 X 3 | 24 & 12 | 4.6 & 1.8 | AHP-1200CAS | -10/+70 | 3 |

# CPV Cascades

## PERFORMANCE CURVE

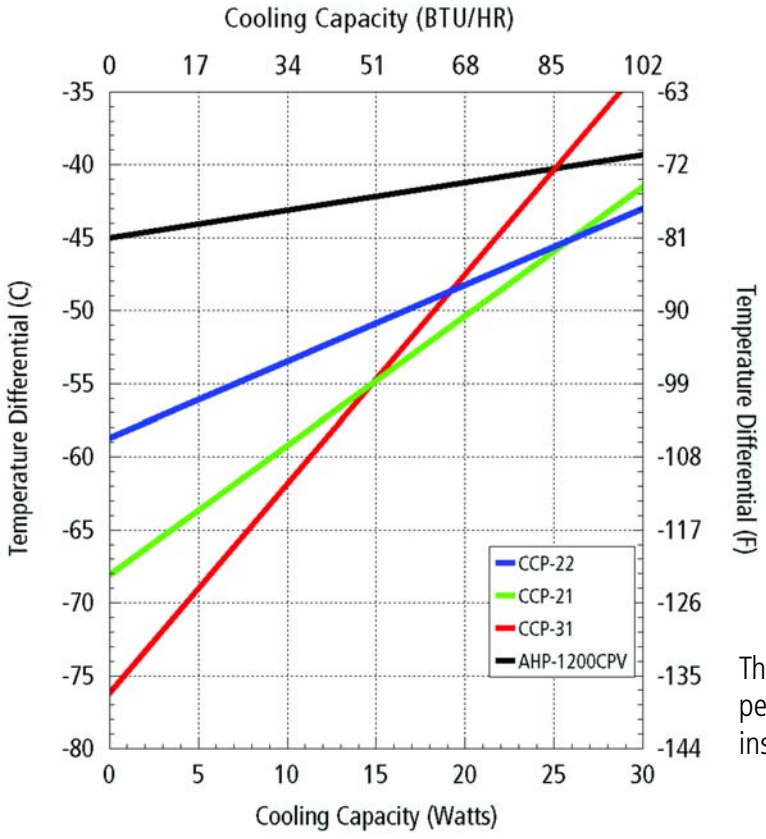


**ENVIRONMENTS**

- Bench top
- Laboratory
- Industrial

**Maximum ΔT**

- CCP-22: -58 °C
- CCP-21: -68 °C
- CCP-31: -76 °C

This performance curves represent tests performed in 25 °C ambient with well insulated cold plate surface.

## DIMENSIONS

### TWO STAGE - LARGE PLATE

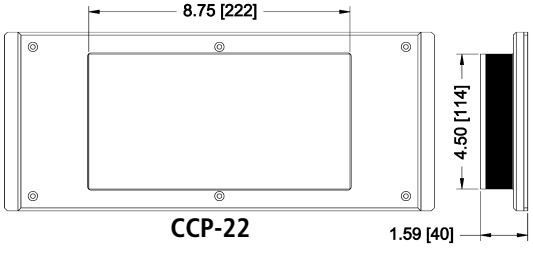


CCP-22

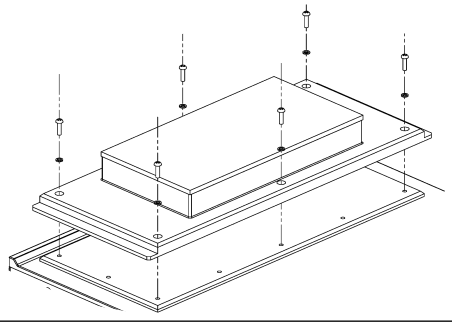

### TWO STAGE - SMALL PLATE

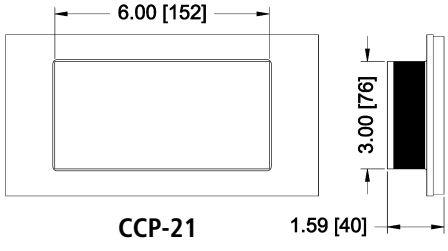


CCP-21

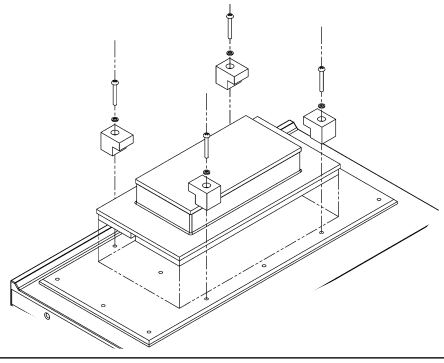

### THREE STAGE

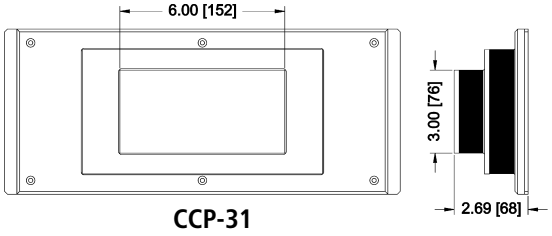


CCP-31

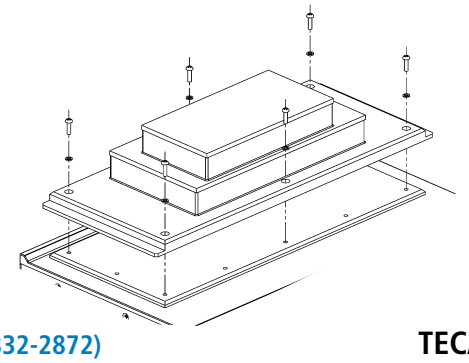

Dimensions: Inches [Millimeters]

## COVERS AND BARRIERS

Clear acrylic covers for AHP-301CPV and AHP-1200CPV

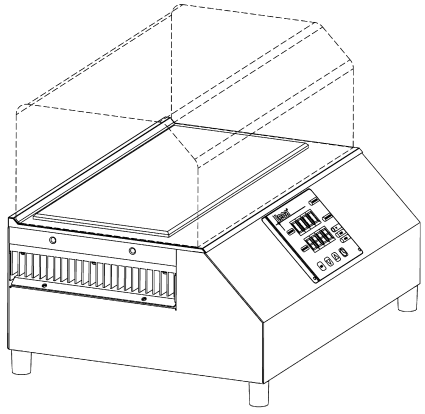

**C-301** 10[254] X 6.5[165] X 4[102] **CN-301** cover for ACP-301

**C-1200** 15[381] X 8[203] X 5[127] **CN-1200** cover for ACP-1200

Hinged clear acrylic covers for AHP-301CPV and AHP-1200CPV

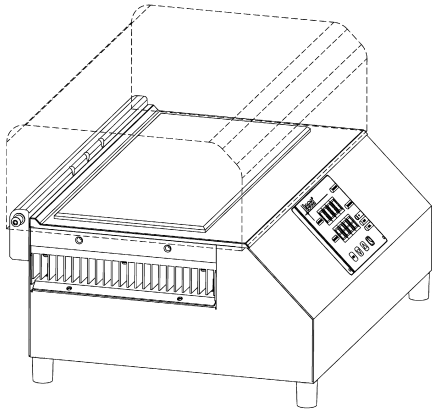

**CH-301** 11[279] X 7.4[188] X 4[102] **CHN-301** cover for ACP-301

**CH-1200** 16[406] X 9.3[236] X 5[127] **CHN-1200** cover for ACP-1200

Clear acrylic barriers for AHP-301CPV and AHP-1200CPV and AHP-1200DCP cold plates. Includes unhinged cover.

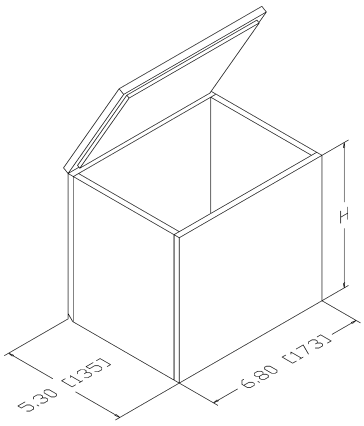


**BH-301** H = Height in inches

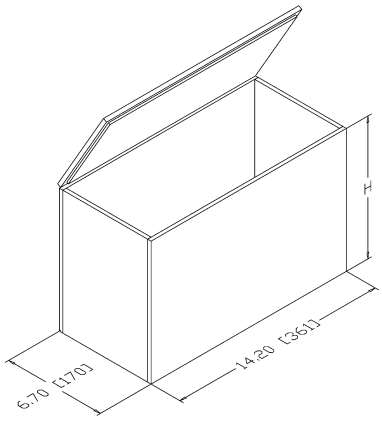


**BH-1200** H = Height in inches

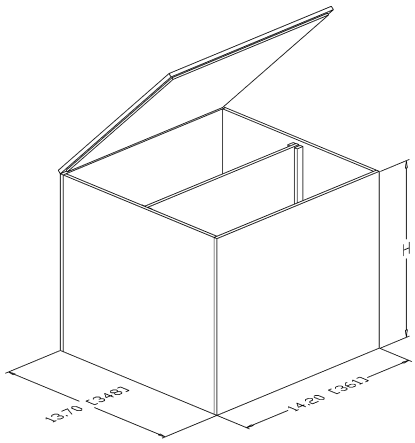


**BH-1200DCP** H = Height in inches

## PYREX PLATES

Borosilicate substrate used to protect cold plate surface from sharp instruments. These plates, GP-1200 and GP-301, can be frozen in place on the cold plates.

| Part Numer | Size Inches [Milimeters] | Used With |
|---|---|---|
| **GP-1200** | 13.3[338] X 5.8[147] X 0.12[3] | AHP-1200CPV |
| **GP-301** | 6.0[152] X 4.5[114] X 0.12[3] | AHP-301CPV |
| **GP-22** | 8.75[222] X 4.5[114] X 0.12[3] | CCP-22 |
| **GP-31** | 6.0[152] X 3.0[76] X 0.12[3] | CCP-21, CCP-31 |

## AIR DEFLECTOR

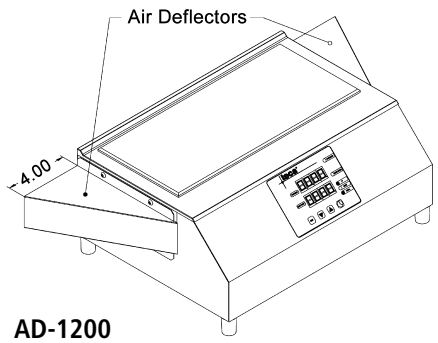


**AD-1200**
Fully reversible air deflector for AHP-1200CPV exhaust.

## INSULATION

Handy sized and easily cut pieces of closed cell polyethylene insulation.

**INS-03** *15" X 2" X 8" Use with AHP-1200CPV*
**INS-04** *10" X 2" X 6" Use with AHP-301CPV*

## ACCESSORY PLATES

Clear anodized aluminum Feature Plates are clamped to CPV cold plates from the side. They come with the side clamps and are blank as shown below. Modify them to your needs, adding taps, grooves and other features. Swap different plates for different jobs. Use them as fixture plates.

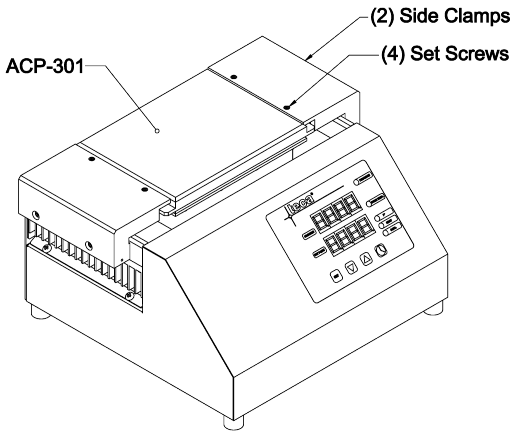


**ACP-301** 6.2[157] X 4.7[119] Surface
Contact TECA for more details

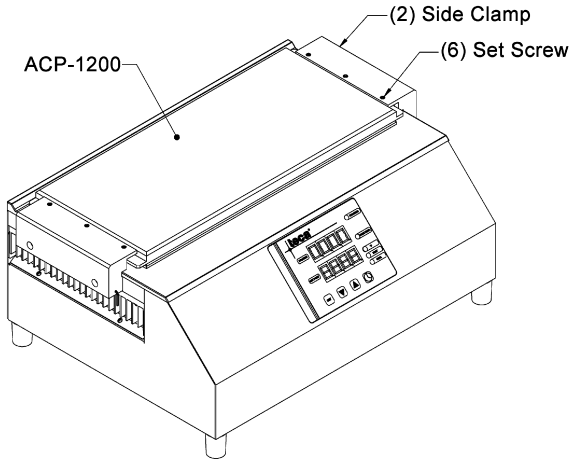


**ACP-1200** 13.3[338] X 5.77147] Surface
Contact TECA for more details

## COLD WELL

Used with 1000 mL Boston Round bottles.

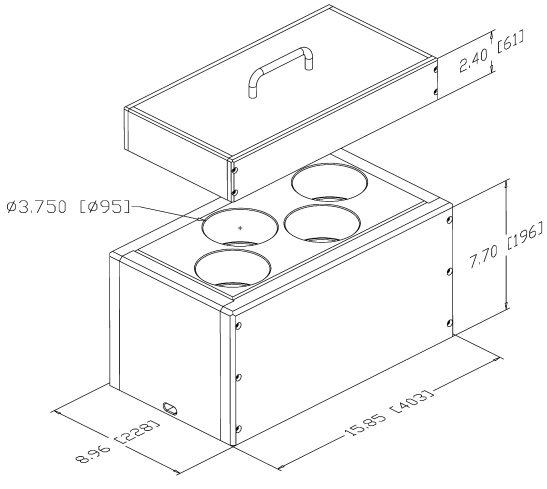


**CWB-01** Layered Aluminum cold well block for four 1 Liter bottles.
For other configurations consult factory

## TUBE CHILLER

A Tube Chiller Plate has channels designed for specific size flexible tubing. When a fluid flows through the tubing it can be heated or cooled without introducing any type of contaminants. Temperature differentials vary with fluid flow rate and specific heat. On site evaluations recommended.

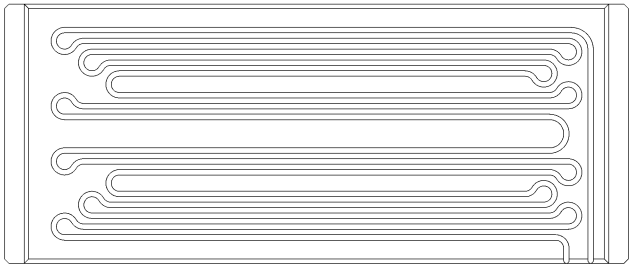

**TC-1** Accessory plate with channels for 0.125" dia tubing. Other tubing diameters available.

**TCC-1** Hinged cover for TC-1

## MISC. ACCESSORIES

### RTD SENSOR

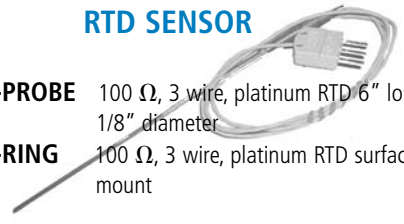

**RTD-PROBE** 100 Ω, 3 wire, platinum RTD 6" long, 1/8" diameter

**RTD-RING** 100 Ω, 3 wire, platinum RTD surface mount

### CONVERTER

**C-USB** USB to RS-232 converter "includes adapter, cable and software"

### CABLE

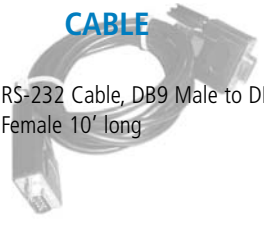

**C-RS232** RS-232 Cable, DB9 Male to DB9 Female 10' long

**See other accessories on page 130**

# AHP-1200CP | Cold Plate

Air Cooled
Flush Mount
NEMA-12

General Purpose 120 VAC, 240 VAC Input

## FEATURES

- Direct contact cooling as much as 48 °C below room temperature
- Weighs only 19 lbs. (8.6 kg)
- Bench top or enclosure mounting
- No compressor, fluorocarbons or filters
- Virtually maintenance-free operation
- Stainless steel exterior housing
- Mounts in any orientation

## INCLUDES

- Integral power supply (120 VAC input)
- Cold plate mounting taps
- Rubber feet
- Power input cord

## SPECIFICATIONS

| MODEL | PART NUMBER | NOTES | PERFORMANCE RATING BTU/HR | VOLTAGE VAC 50/60 HZ | CURRENT AMPS. | WEIGHT LBS. (KG) | TEMP. CONTROL | OPERATING AMBIENT °C |
|---|---|---|---|---|---|---|---|---|
| AHP-1200CP | 1-3090-0-000 | Cool only | 830-950 | 120 | 4.0 | 18(8.2) | None | -15/+60 |
| AHP-1200CP | 1-3050-0-000 | Cool only | 830-950 | 120 | 4.0 | 18(8.2) | EXT* | -15/+60 |
| AHP-1200CPHC | 1-3050-1-000 | Heat/Cool | 830-950 | 120 | 4.0 | 18(8.2) | EXT* | -15/+60 |
| AHP-1202CP | 1-3092-0-000 | Cool only | 830-950 | 240 | 2.5 | 23(10.5) | None | -15/+60 |
| AHP-1202CP | 1-3052-0-000 | Cool only | 830-950 | 240 | 2.5 | 23(10.5) | EXT* | -15/+60 |
| AHP-1202CPHC | 1-3052-1-000 | Heat/Cool | 830-950 | 240 | 2.5 | 23(10.5) | EXT* | -15/+60 |

* Unit is set for 5-32 VDC external control signal

# AHP-1200CP

**ENVIRONMENTS**

Bench top
Factory
Industrial/OEM

**COOLING CAPACITY**

225 Watts @ 0 °C ΔT

## PERFORMANCE CURVE

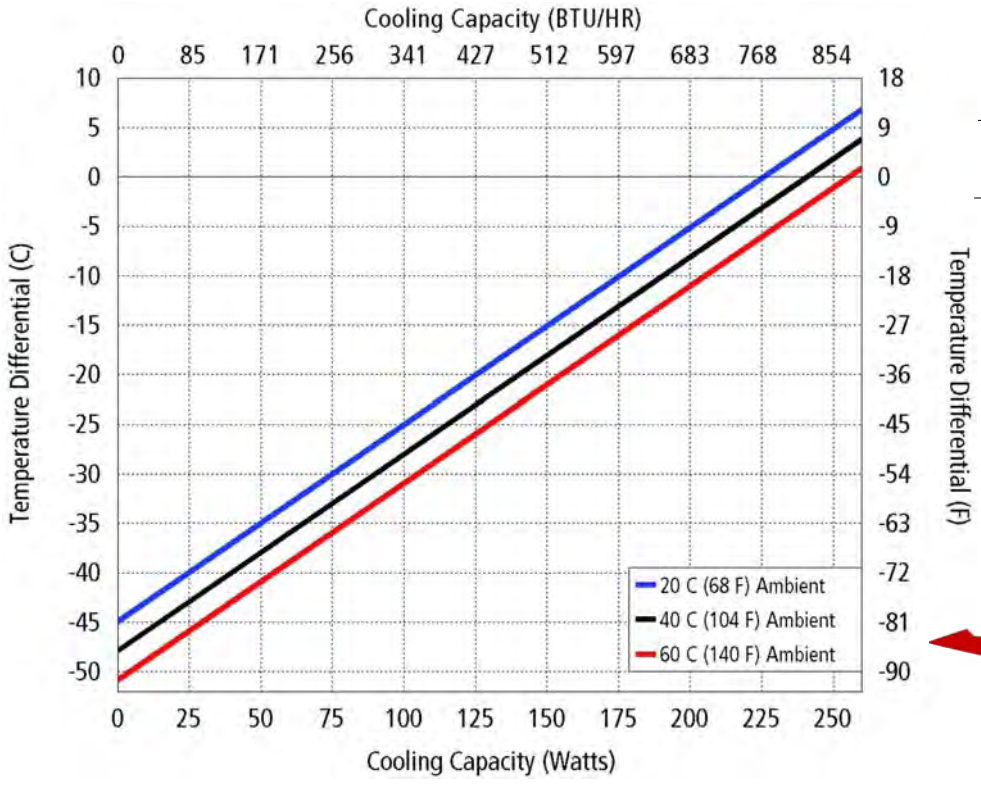


| Equation of line: y=ΔT(°C) x=Capacity (Watts) | | | |
|---|---|---|---|
| **Ambient Temp** | **20°C** | **40°C** | **60°C** |
| Cold Plate | y=.199x-44.9 | y=.199x-47.9 | y=.199x-50.8 |

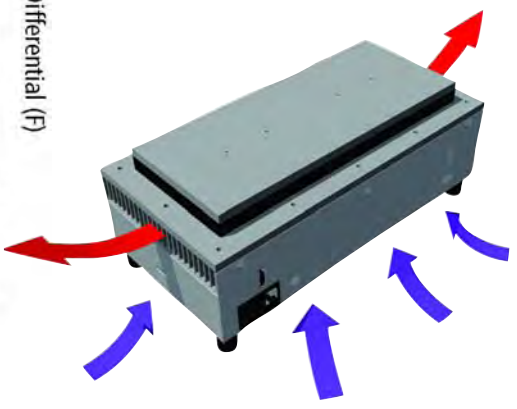

Ambient Air Path

## DIMENSIONS

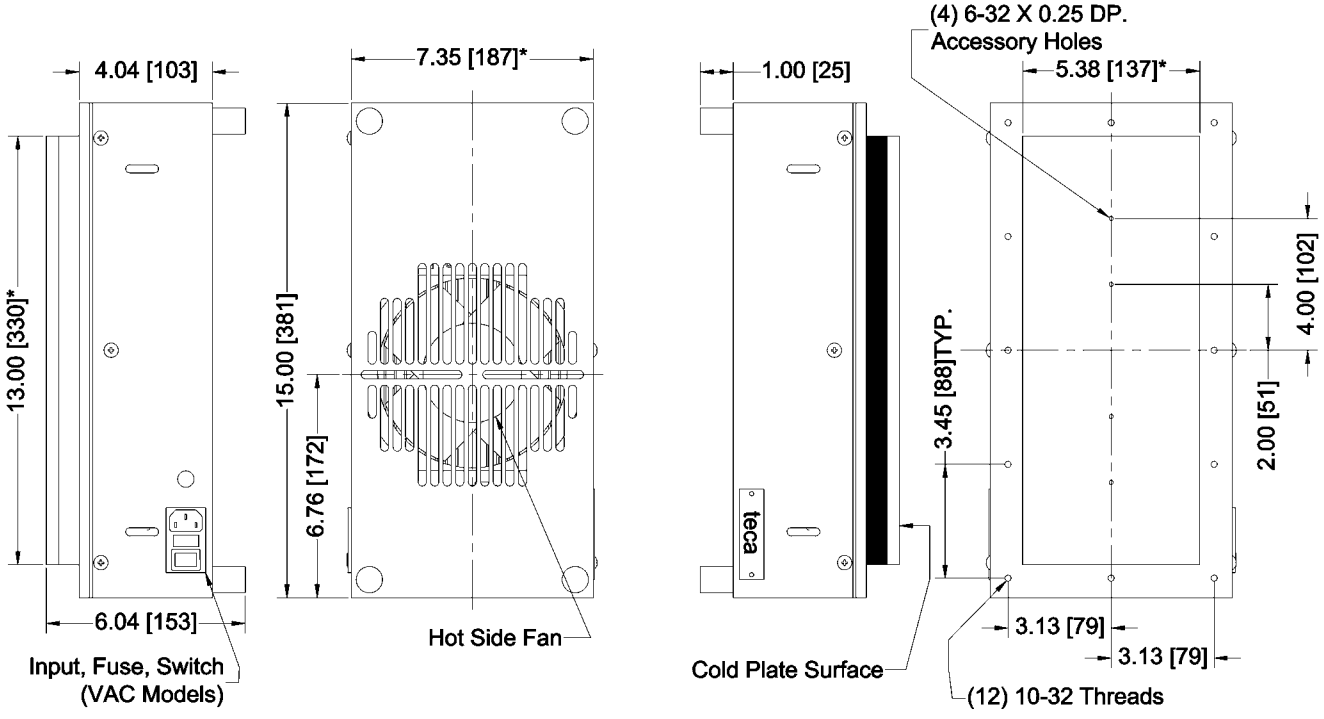


* Dimension does not include hardware and sealant.
Dimension: Inches [Millimeters]

# AHP-1200CP | Cold Plate

Air Cooled
Flush Mount
NEMA-12

General purpose 24 VDC input

## FEATURES

- Direct contact cooling as much as 48 °C below room temperature
- Weighs only 19 lbs. (8.6 kg)
- Mount thru bench top or enlcosure wall
- No compressor, fluorocarbons or filters
- Virtually maintenance-free operation
- Stainless steel exterior housing
- Mounts in any orientation

## INCLUDES

- Cold plate accessory tapped holes
- Cold plate mounting taps
- Rubber feet
- Power input leads

## SPECIFICATIONS

| MODEL | PART NUMBER | NOTES | PERFORMANCE RATING | VOLTAGE VDC | CURRENT AMPS. | WEIGHT LBS. (KG) | TEMP. CONTROL * | OPERATING AMBIENT °C |
|---|---|---|---|---|---|---|---|---|
| AHP-1200CP | 1-3095-0-000 | Cool only | 830-950 | 24(16-28) | 9.0 | 18(8.2) | None | -15/+70 |
| AHP-1200CP | 1-3055-0-000 | Cool only | 830-950 | 24(16-28) | 9.0 | 18(8.2) | EXT* | -15/+70 |
| AHP-1200CPHC | 1-3055-1-000 | Heat/Cool | 830-950 | 24(16-28) | 9.0 | 19(8.6) | EXT** | -15/+70 |

* Unit is set for 5-32 VDC external control signal, relay included

** Unit is set for 5-32 VDC external control signal, H-Bridge relay(s) included

# AHP-1200CP

**ENVIRONMENTS**

Bench top
Factory
Industrial/OEM

**COOLING CAPACITY**

260 Watts @ 0 °C ΔT

## PERFORMANCE CURVE

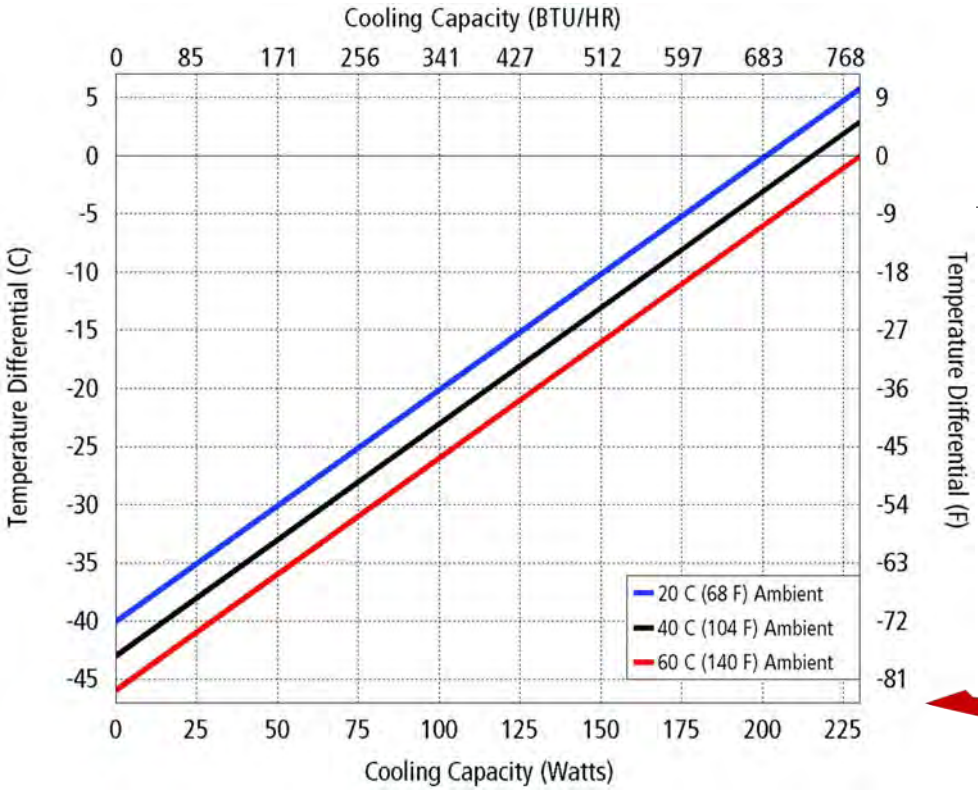


| Equation of line: y=ΔT(°C) x=Capacity (Watts) | | | |
|---|---|---|---|
| **Ambient Temp** | **20°C** | **40°C** | **60°C** |
| Cold Plate | y=.199x-40.0 | y=.199x-43.0 | y=.199x-46.0 |

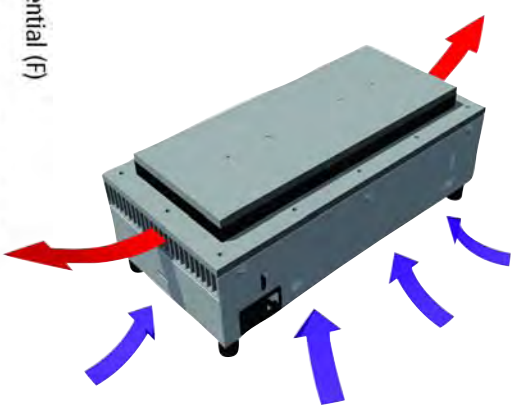

Ambient Air Path

## DIMENSIONS

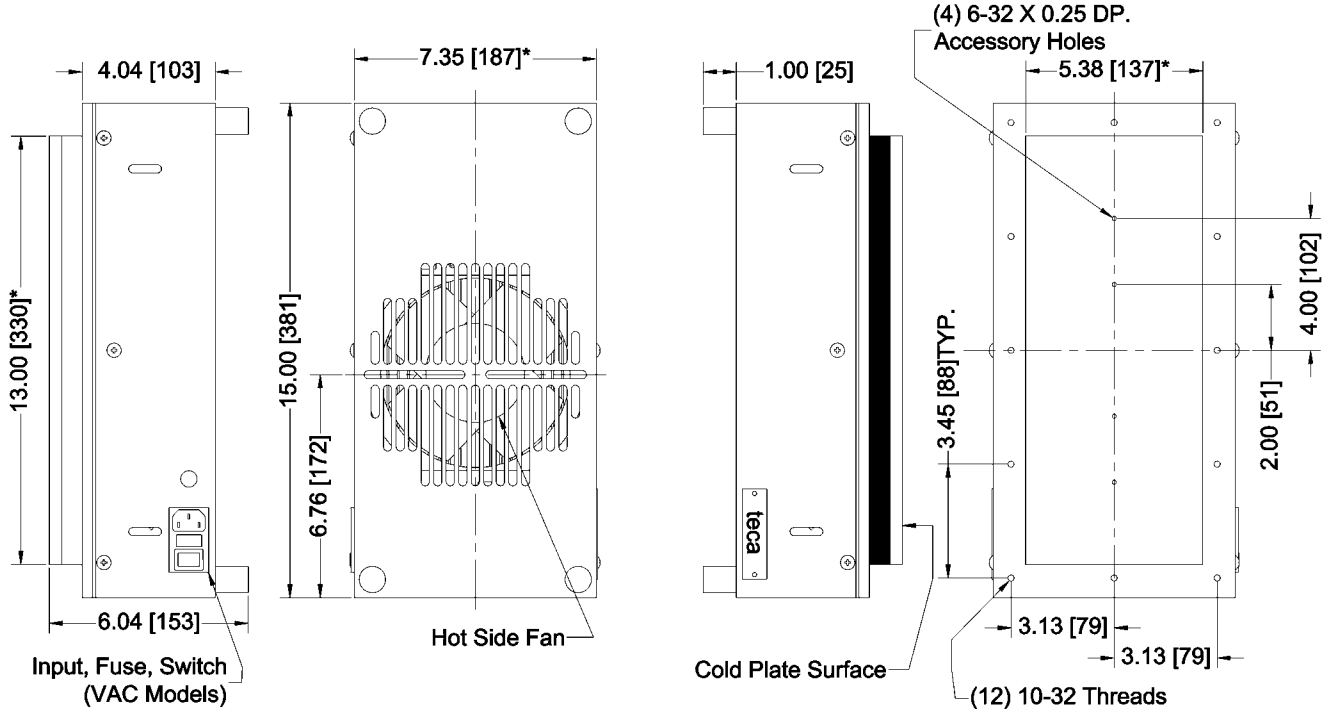


* Dimension does not include hardware and sealant.
Dimension: Inches [Millimeters]

# AHP-301CP | Cold Plate

Air Cooled | General Purpose 120 VAC, 240 VAC Input

## FEATURES

- Direct contact cooling as much as 52°C below room temperature
- Weighs only 11 lbs. (5.0 kg)
- Mounts through bench top or enclosure wall
- No compressor, fluorocarbons or filters
- Virtually maintenance-free operation
- Stainless steel exterior housing
- Mounts in any orientation

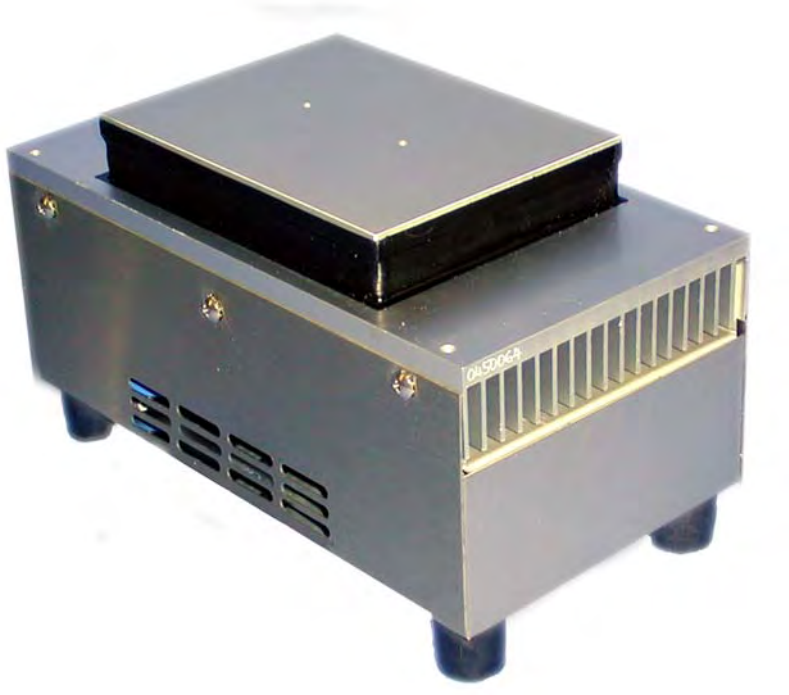

## INCLUDES

- Cold plate accessory tapped holes
- Rubber feet
- Power input cord
- Machined cold plate surface

## SPECIFICATIONS

| MODEL | PART NUMBER | NOTES | PERFORMANCE RATING BTU/HR | VOLTAGE VAC 50/60 Hz | CURRENT AMPS. | WEIGHT LBS. (KG) | TEMP. CONTROL * | OPERATING AMBIENT °C |
|---|---|---|---|---|---|---|---|---|
| AHP-301CP | 1-7090-0-000 | Cool only | 225-265 | 120 | 1.2 | 11(5) | none | -10/+60 |
| AHP-301CP | 1-7050-0-000 | Cool only | 225-265 | 120 | 1.2 | 11(5) | EXT* | -10/+60 |
| AHP-301CPHC | 1-7050-1-000 | Heat/Cool | 225-265 | 120 | 1.2 | 11(5) | EXT* | -10/+60 |
| AHP-301CP | 1-7092-0-000 | Cool only | 225-265 | 240 | 0.6 | 11(5) | none | -10/+60 |
| AHP-301CP | 1-7052-0-000 | Cool only | 225-265 | 240 | 0.6 | 11(5) | EXT* | -10/+60 |
| AHP-301CPHC | 1-7052-1-000 | Heat/Cool | 225-265 | 240 | 0.6 | 11(5) | EXT* | -10/+60 |

* Unit is set for 5-32 VDC external signal, relay(s) included

# AHP-301CP

**ENVIRONMENTS**

Bench top
Factory
Industrial/OEM

**COOLING CAPACITY**

70 Watts @ 0 °C ΔT (40 °C Ambient)

## PERFORMANCE CURVE

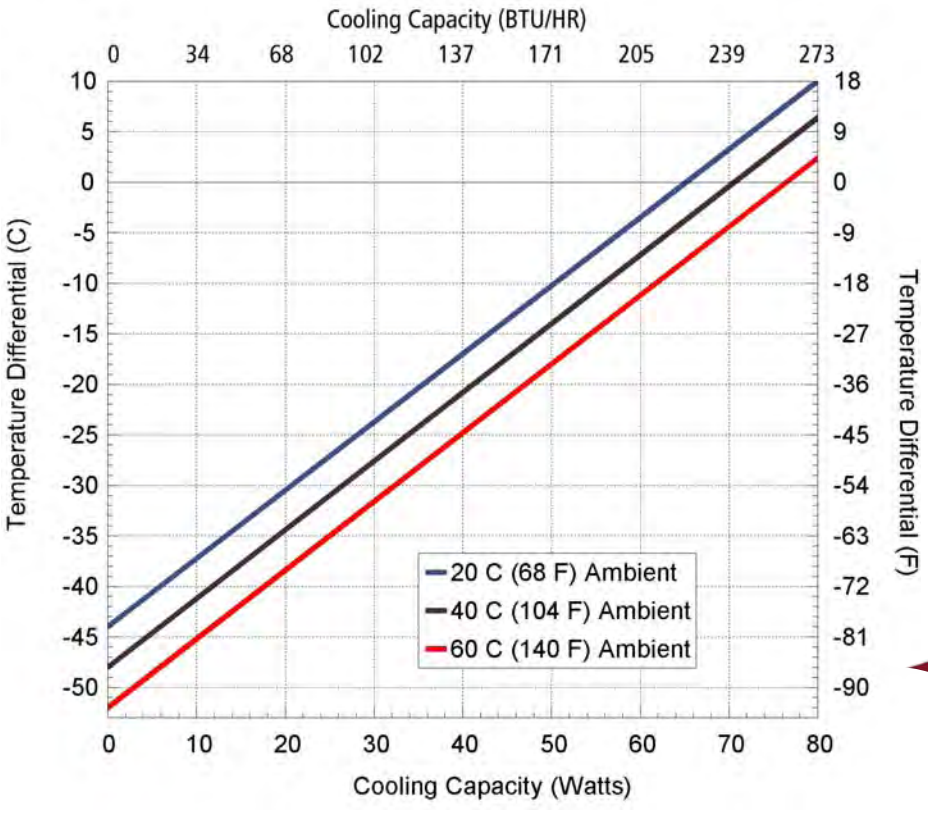


| Equation of line: y=ΔT(°C) x=Capacity (Watts) | | | |
|---|---|---|---|
| **Ambient Temp** | **20°C** | **40°C** | **60°C** |
| Cold Plate | y=.68x-44.0 | y=.68x-48.0 | y=.68x-52.0 |

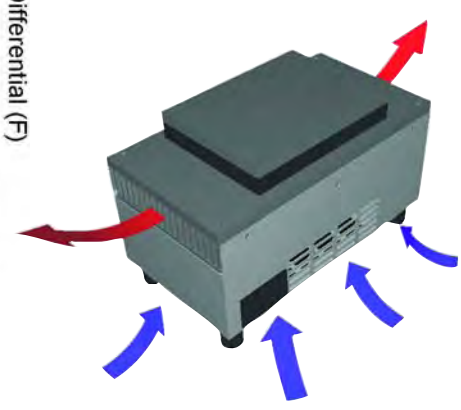

Ambient Air Path

## DIMENSIONS

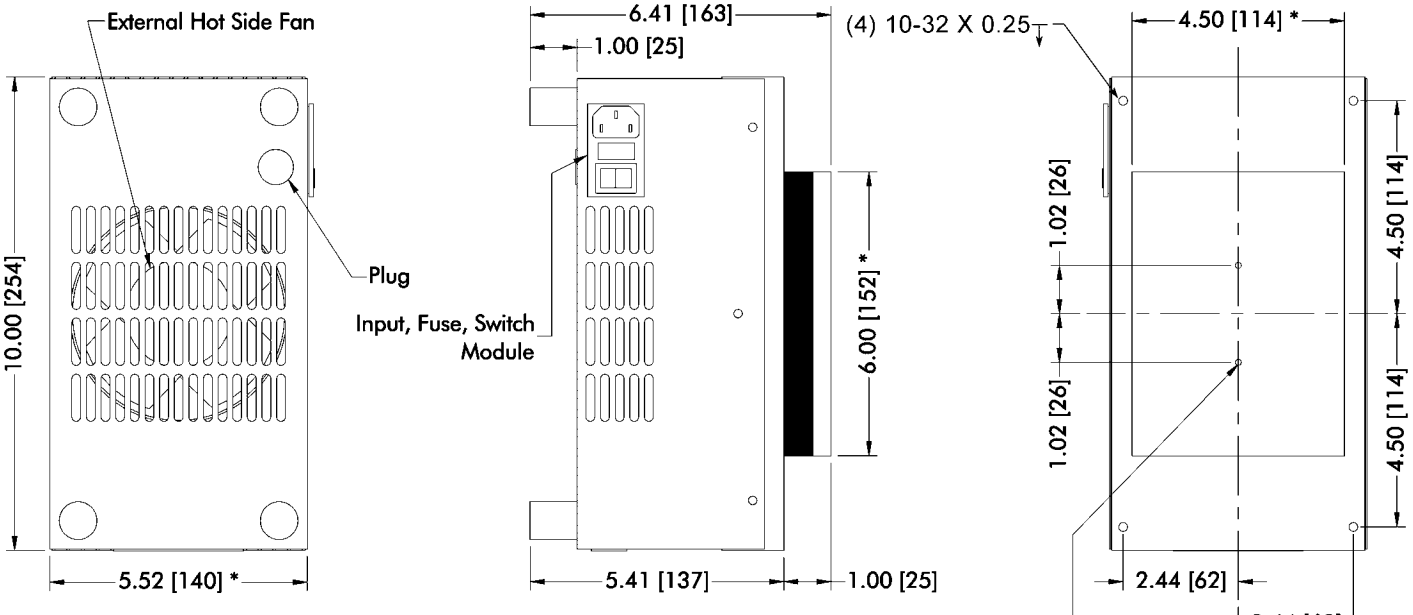


* Dimension does not include hardware and sealant.
Dimensions: Inches [Millimeters]

# AHP-300CP
# AHP-150CP

Air Cooled

# Thermoelectric Cold Plates

General Purpose VDC Input

## FEATURES

- Direct contact cooling as much as 56 °C below room temperature
- No compressor, fluorocarbons or filters
- Virtually maintenance-free operation
- Mounts in any orientation
- Works with TC-3500

AHP-300CP

## INCLUDES

- Cold plate accessory tapped holes
- Machined surface
- Terminal strip for wire hook up

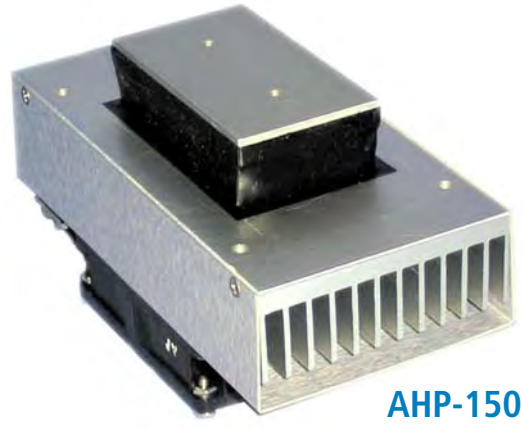

AHP-150CP

## SPECIFICATIONS AHP-300CP

| MODEL | PART NUMBER | NOTES | PERFORMANCE RATING BTU/HR | VOLTAGE VDC | CURRENT AMPS. | WEIGHT LBS. (KG) | TEMP. CONTROL | OPERATING AMBIENT °C |
|---|---|---|---|---|---|---|---|---|
| AHP-300CP | 1-7097-0-000 | Cool only | 290-330 | 12/24/48 | 12/6/3 | 6(2.7) | None | -10/+60 |
| AHP-300CPHC | 1-7094-1-000 | Heat/Cool | 290-330 | 12 | 12 | 6(2.7) | None | -10/+60 |
| AHP-300CPHC | 1-7095-1-000 | Heat/Cool | 290-330 | 24 | 6 | 6(2.7) | None | -10/+60 |
| AHP-300CPHC | 1-7097-1-001 | Heat/Cool Rev. Pol.* | 290-330 | 12/24/48 | 12/6/3 | 6(2.7) | None* | -10/+60 |

## SPECIFICATIONS AHP-150CP

| MODEL | PART NUMBER | NOTES | PERFORMANCE RATING BTU/HR | VOLTAGE VDC | CURRENT AMPS. | WEIGHT LBS. (KG) | TEMP. CONTROL | OPERATING AMBIENT °C |
|---|---|---|---|---|---|---|---|---|
| AHP-150CP | 1-8098-0-000 | Cool only | 140-160 | 12/24 | 6/3 | 2.5(1.2) | None | -10/+60 |
| AHP-150CPHC | 1-8094-1-000 | Heat/Cool | 140-160 | 12 | 6 | 2.5(1.2) | None | -10/+60 |
| AHP-150CPHC | 1-8095-1-000 | Heat/Cool | 140-160 | 24 | 3 | 2.5(1.2) | None | -10/+60 |
| AHP-150CPHC | 1-8098-1-001 | Heat/Cool Rev. Pol* | 140-160 | 12/24 | 6/3 | 2.5(1.2) | None* | -10/+60 |

Note: Options for temperature control, consult factory.

* Reverse polarity unit can be used with external TC-3500 controller see P. 136

See also , "Power Supplies" , P. 141

## PERFORMANCE CURVE

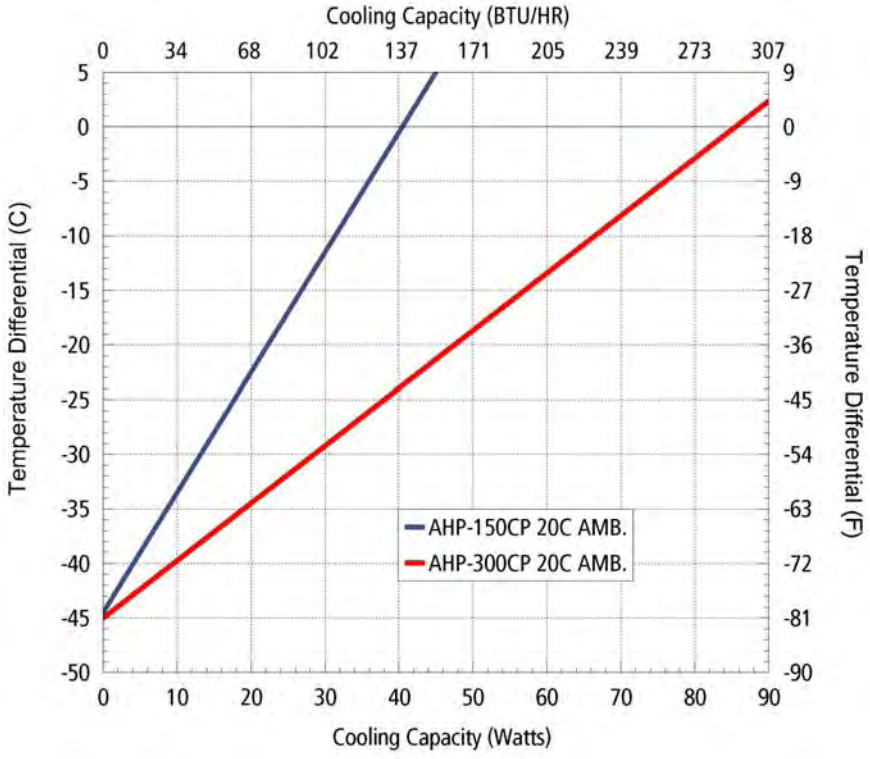


# AHP-300CP

**ENVIRONMENTS**

Bench Top, Factory, Industrial, OEM

**COOLING CAPACITY**

85 Watts @ 0 °C ΔT (20 °C Ambient)

# AHP-150CP

**ENVIRONMENTS**

Bench Top, Laboratory, Industrial

**COOLING CAPACITY**

40 Watts @ 0 °C ΔT (20 °C Ambient)

| Equation of line: y=ΔT(°C) x=Capacity (Watts) | | | |
|---|---|---|---|
| **Ambient Temp** | **20°C** | **40°C** | **60°C** |
| 300CP Cold Plate | y=.526x-45.0 | y=.526x-48.0 | y=.526x-51.0 |
| 150CP Cold Plate | y=1.1x-44.5 | y=1.1x-48 | y=1.1x-51.5 |

## DIMENSIONS

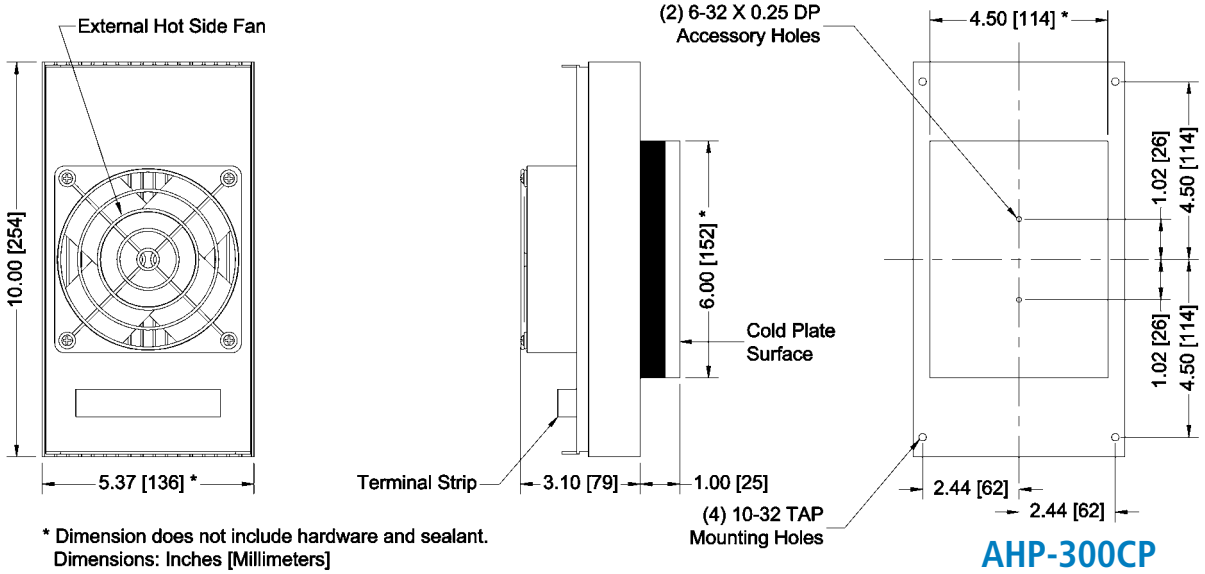


* Dimension does not include hardware and sealant.
Dimensions: Inches [Millimeters]

**AHP-300CP**

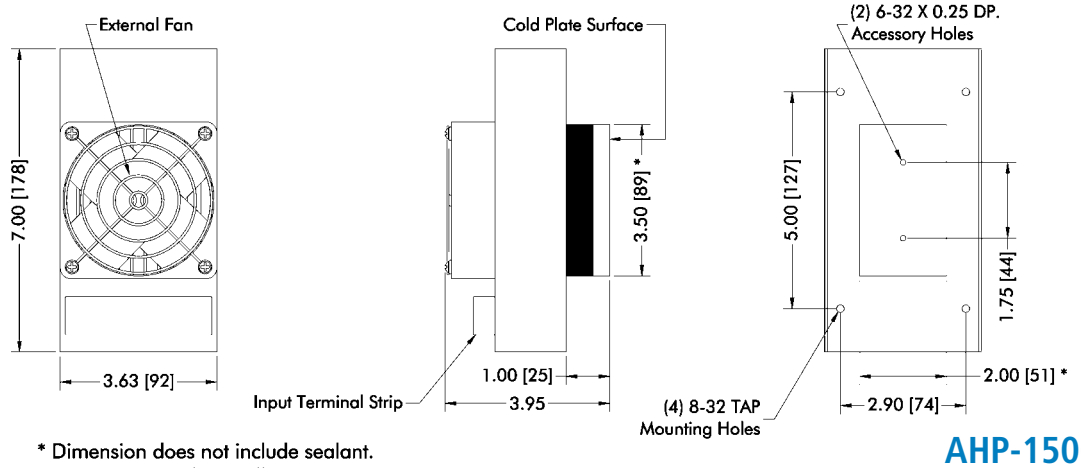


* Dimension does not include sealant.
Dimensions: Inches [Millimeters]

**AHP-150CP**

# LHP-1700CP | Liquid Cooled Cold Plate

Liquid Cooled | Multi Environment 120 VAC, 240 VAC Input

## FEATURES

- Standard 19" Rack mounting
- No moving parts
- Weighs only 20 lbs. (9.1kg)
- Direct contact cooling as much as 62 °C below liquid temperature
- No compressor, fluorocarbons or filters
- Virtually maintenance-free operation
- Mounts in any orientation
- Requires a constant supply of cooling fluid

## INCLUDES

- Compression fittings
- Power cord
- Mounting provision

## SPECIFICATIONS

| MODEL | PART NUMBER | NOTES | PERFORMANCE RATING BTU/HR | VOLTAGE VAC 50/60 HZ | CURRENT AMPS. | WEIGHT LBS. (KG) | MIN FLOW GPM | TEMP. CONTROL * | OPERATING AMBIENT °C |
|---|---|---|---|---|---|---|---|---|---|
| LHP-1700CP | 3-1090-0-000 | Cool only | 1360-1630 | 120 | 7.0 | 20(9.1) | 0.3 | none | 0/+70 |
| LHP-1700CP | 3-1050-0-000 | Cool only | 1360-1630 | 120 | 7.0 | 20(9.1) | 0.3 | EXT* | 0/+70 |
| LHP-1702CP | 3-1092-0-000 | Cool only | 1360-1630 | 240 | 5.0 | 20(9.1) | 0.3 | none | 0/+70 |
| LHP-1702CP | 3-1052-0-000 | Cool only | 1360-1630 | 240 | 5.0 | 20(9.1) | 0.3 | EXT* | 0/+70 |
| LHP-1700CPHC | 3-1050-1-000 | Heat/Cool | 1360-1630 | 120 | 7.0 | 20(9.1) | 0.3 | EXT* | 0/+70 |
| LHP-1702CPHC | 3-1052-1-000 | Heat/Cool | 1360-1630 | 240 | 5.0 | 20(9.1) | 0.3 | EXT* | 0/+70 |

* Unit is set for 5-32 VDC external signal, relay(s) included

# LHP-1700CP

**ENVIRONMENTS**

Bench Top, Factory, Industrial, OEM
from harsh to benign environments

**COOLING CAPACITY**

440 Watts @ 0 °C ΔT

## PERFORMANCE CURVE

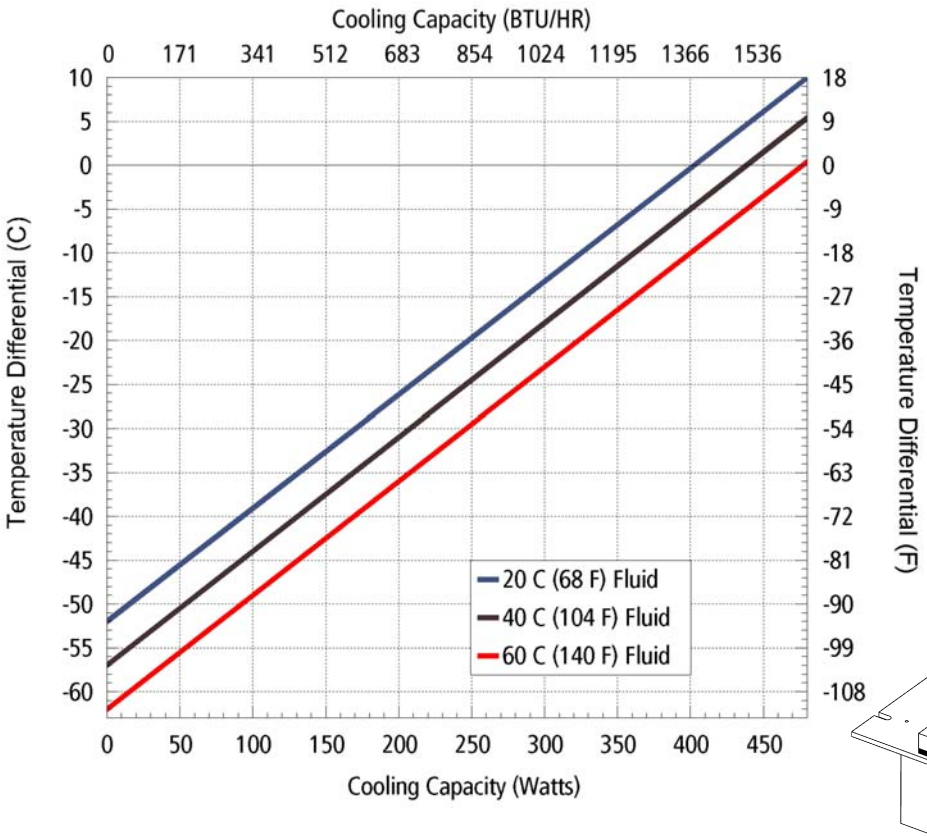


| Equation of line: y=ΔT(°C) x=Capacity (Watts) | | | |
|---|---|---|---|
| **Fluid Temp** | **20°C** | **40°C** | **60°C** |
| Cold Plate Temp | y=.13x-52.0 | y=.13x-57.0 | y=.13x-62.0 |

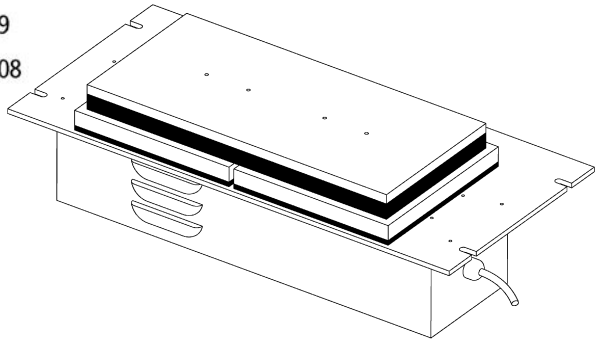

## DIMENSIONS

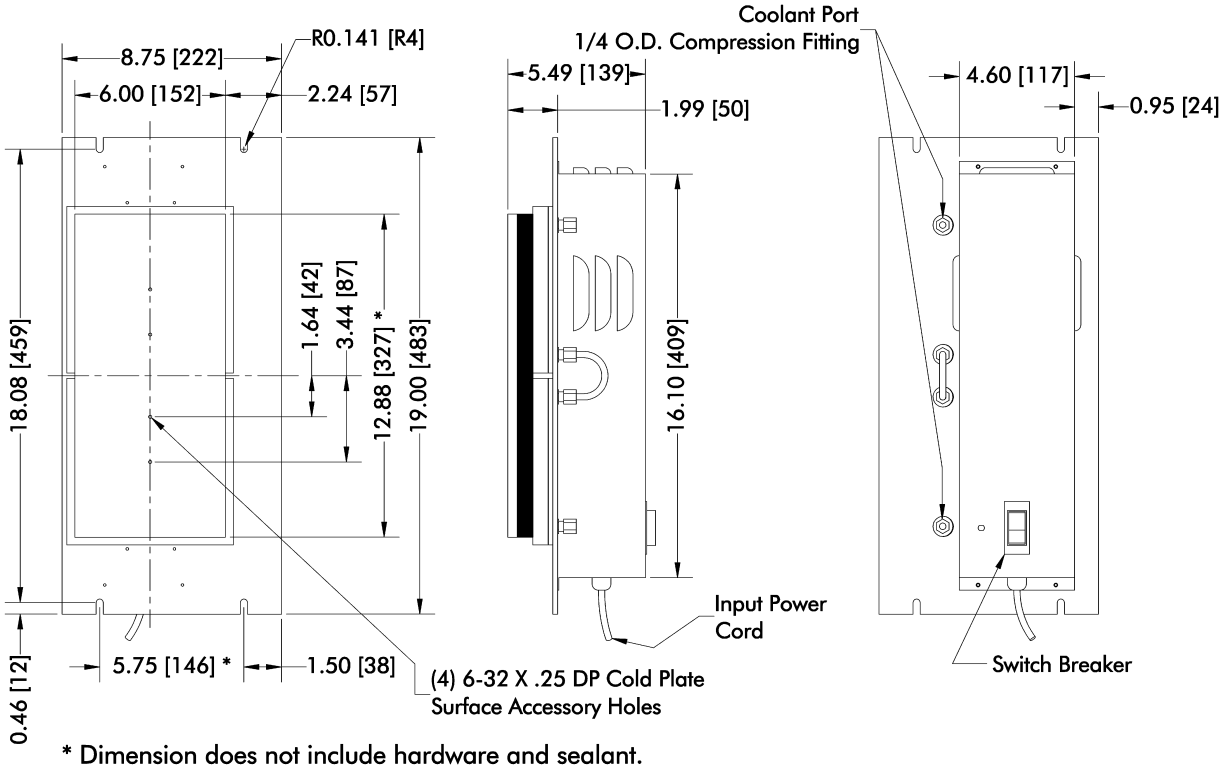


* Dimension does not include hardware and sealant.
Dimensions: Inches [Millimeters]

# LHP-1200CP | Liquid Cooled Cold Plate

Liquid Cooled | General Purpose 24 VDC Input

## FEATURES

- No moving parts
- Weighs only 20 lbs. (9.1kg)
- Direct contact cooling as much as 47 °C below liquid temperature
- No compressor, fluorocarbons or filters
- Virtually maintenance-free operation
- Mounts in any orientation

## INCLUDES

- Female 1/4-18 NPT fittings
- Power input leads
- Through bentch top or wall mount
- Copper fluid path (stainless steel optional)

## SPECIFICATIONS

| MODEL | PART NUMBER | NOTES | PERFORMANCE RATING BTU/HR | VOLTAGE VDC | CURRENT AMPS. | WEIGHT LBS. (KG) | MIN FLOW GPM | TEMP. CONTROL | OPERATING AMBIENT °C |
|---|---|---|---|---|---|---|---|---|---|
| LHP-1200CP | 3-3095-0-000 | Cool only | 1360-1630 | 24 | 9.0 | 20(9.1) | 0.3 | none | 0/+70 |
| LHP-1200CP | 3-3053-0-000 | Cool only | 1360-1630 | 24 | 9.0 | 20(9.1) | 0.3 | EXT* | 0/+70 |
| LHP-1200CPHC | 3-3055-1-000 | Heat/Cool | 1360-1630 | 24 | 9.0 | 20(9.1) | 0.3 | EXT** | 0/+70 |

* Unit is set for 5-32 VDC external signal, relay included

** Unit is set for 5-32 VDC external signal, H-Bridge quad relay(s) included

For stainless steel fluid path contact TECA

# LHP-1200CP

**ENVIRONMENTS**

Bench Top, Factory, Industrial, OEM
from harsh to benign environments

**COOLING CAPACITY**

260 Watts @ 0 °C ΔT

## PERFORMANCE CURVE

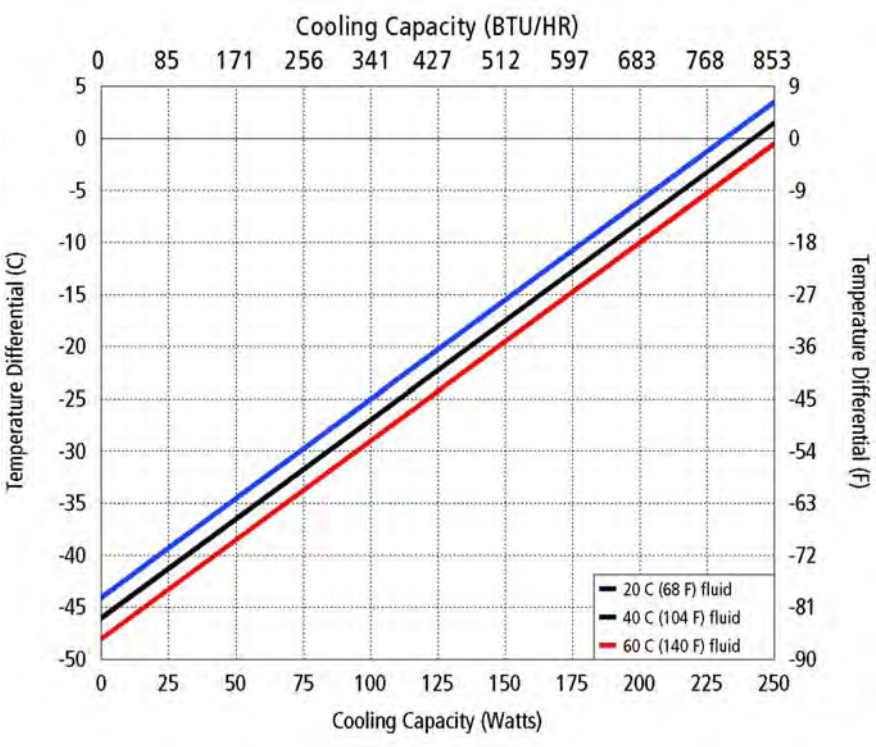


| Equation of line: y=ΔT(°C) x=Capacity (Watts) | | | |
|---|---|---|---|
| **Fluid Temp** | **20°C** | **40°C** | **60°C** |
| Cold Plate Temp | y=.19x-44.0 | y=.19x-46.0 | y=.19x-48.0 |

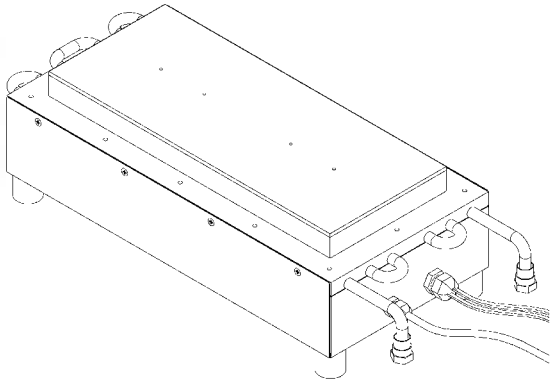

## DIMENSIONS

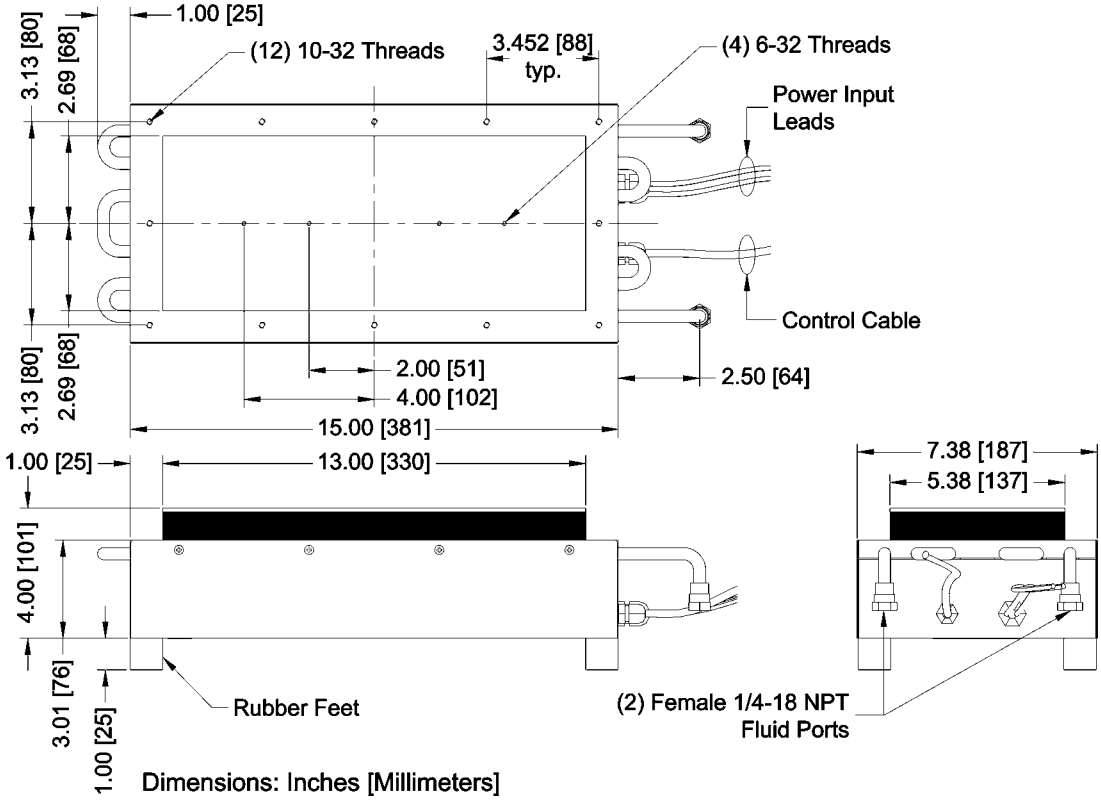

# LHP-800CP
# LHP-300CP
# LHP-150CP

Liquid Cooled

# Thermoelectric Cold Plates

General Purpose VDC Input

## FEATURES

- No moving parts
- Direct contact cooling as much as 51 °C below liquid temperature
- No compressor, fluorocarbons or filters
- Virtually maintenance-free operation
- Mounts in any orientation

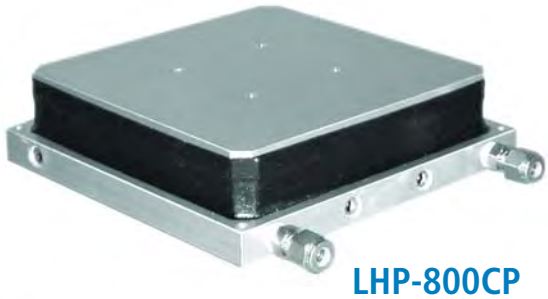

LHP-800CP

LHP-300CP

## INCLUDES

- Compression fittings
- Auxiliary mounting holes
- Machined cold plate surfaces

LHP-150CP

## SPECIFICATIONS LHP-800CP

| MODEL | PART NUMBER | NOTES | PERFORMANCE RATING BTU/HR | VOLTAGE VDC | CURRENT AMPS. | WEIGHT LBS. (KG) | MIN FLOW GPM | OPERATING AMBIENT °C | HEAT VOLTAGE |
|---|---|---|---|---|---|---|---|---|---|
| LHP-800CP | 3-5095-0-000 | Heat/Cool * | 700-830 | 24 | 14 | 5.2 (2.3) | 0.3 | 0/+70 | 24 VDC |
| LHP-800CPHC | 3-5095-1-000 | Heat/Cool ** | 700-830 | 24 | 14 | 5.2 (2.3) | 0.3 | 0/+70 | 24 VDC |

* Heating via reverse polarity to thermoelectrics ** Heating via embeded resistive heaters in the cold plate

## SPECIFICATIONS LHP-300CP

| MODEL | PART NUMBER | NOTES | PERFORMANCE RATING BTU/HR | VOLTAGE VDC | CURRENT AMPS. | WEIGHT LBS. (KG) | MIN FLOW GPM | OPERATING AMBIENT °C | HEAT VOLTAGE |
|---|---|---|---|---|---|---|---|---|---|
| LHP-300CP | 3-7098-0-000 | Heat/Cool * | 280-335 | 12/24 | 12/6 | 1.8 (.81) | 0.2 | 0/+70 | 12/24 VDC |
| LHP-300CPHC | 3-7095-1-000 | Heat/Cool ** | 280-335 | 24 | 6 | 1.8 (.81) | 0.2 | 0/+70 | 24 VDC |

* Heating via reverse polarity to thermoelectrics ** Heating via embeded resistive heaters in the cold plate

## SPECIFICATIONS LHP-150CP

| MODEL | PART NUMBER | NOTES | PERFORMANCE RATING BTU/HR | VOLTAGE VDC | CURRENT AMPS. | WEIGHT LBS. (KG) | MIN FLOW GPM | OPERATING AMBIENT °C | HEAT VOLTAGE |
|---|---|---|---|---|---|---|---|---|---|
| LHP-150CP | 3-8094-0-000 | Heat/Cool * | 130-160 | 12 | 4.5 | .75(.34) | 0.2 | 0/+70 | 12 VDC |
| LHP-150CPHC | 3-8094-1-000 | Heat/Cool ** | 130-160 | 12 | 4.5 | .75(.34) | 0.2 | 0/+70 | 12 VDC |
| LHP-150CPHC | 3-8099-1-000 | Heat/Cool ** | 130-160 | 12 | 4.5 | .75(.34) | 0.2 | 0/+70 | 120 VAC |

* Heating via reverse polarity to thermoelectrics ** Heating via embeded resistive heaters in the cold plate

Note: Option for temperature control, consult factory. See also , "Power Supplies", P. 141

## PERFORMANCE CURVE

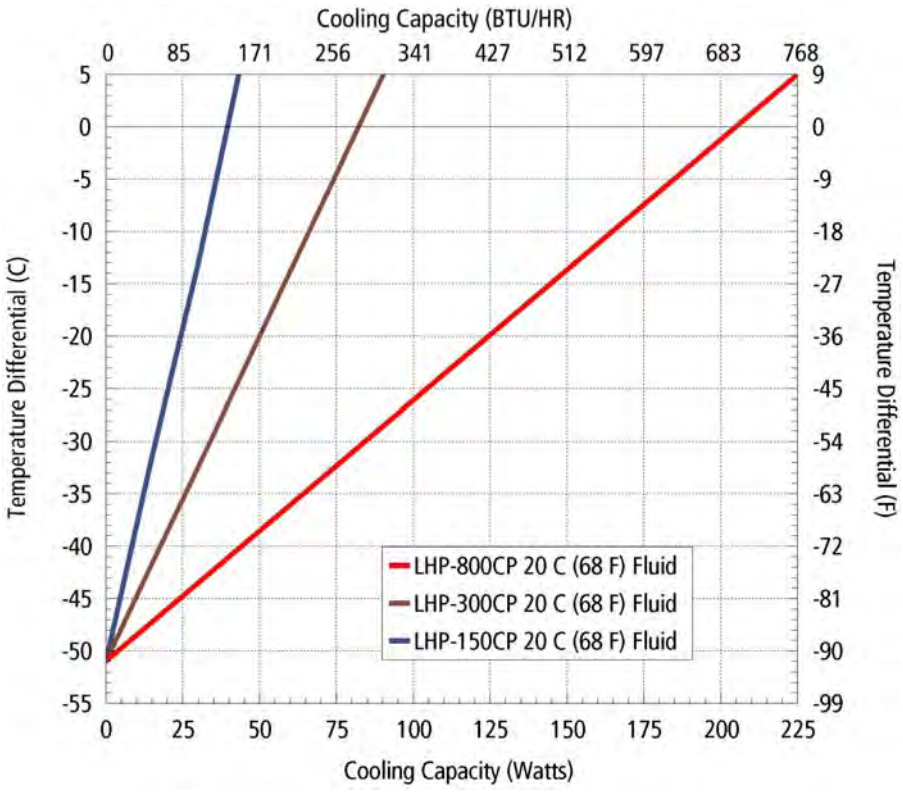


## LHP-800CP

**COOLING CAPACITY**

205 Watts @ 0 °C ΔT

## LHP-300CP

**COOLING CAPACITY**

82 Watts @ 0 °C ΔT

## LHP-150CP

**COOLING CAPACITY**

40 Watts @ 0 °C ΔT

| Equation of line: y=ΔT(°C) x=Capacity (Watts) | | | |
|---|---|---|---|
| **Fluid Temp** | **20°** | **40°C** | **60°C** |
| LHP-800CP | y=.25x-51.0 | y=.25x-56.0 | y=.25-61.0 |
| LHP-300CP | y=.62x-51.0 | y=.62x-56.0 | y=.62x-61.0 |
| LHP-150CP | y=1.3x-51.0 | y=1.3x-56.0 | y=1.3x-61.0 |

## DIMENSIONS

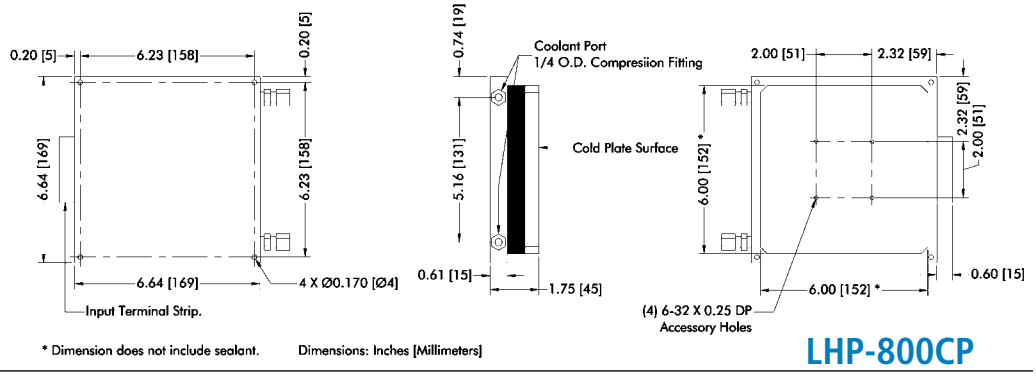


* Dimension does not include sealant. Dimensions: Inches [Millimeters]

**LHP-800CP**

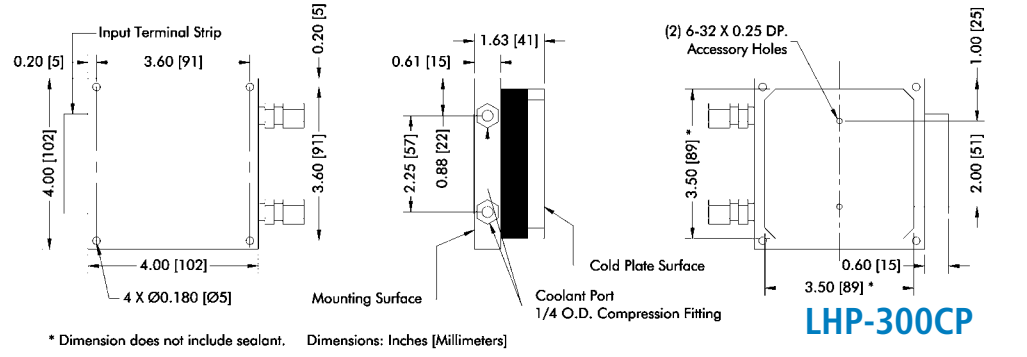


* Dimension does not include sealant. Dimensions: Inches [Millimeters]

**LHP-300CP**

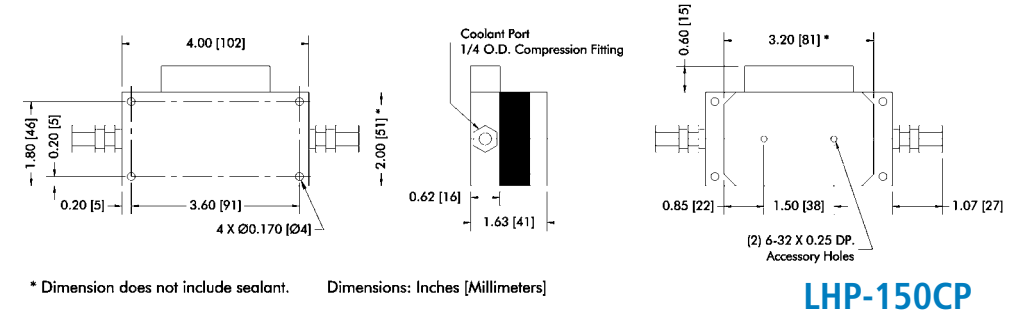


* Dimension does not include sealant. Dimensions: Inches [Millimeters]

**LHP-150CP**

# Liquid Chillers

**730-2700 BTU/hr**

Teca Liquid Chillers are compact and reliable alternatives to conventional recirculating coolers. A complete integrated package is now offered in a standard configuration.

## FEATURES

- Precise temperature control
- External plumbing lines with quick connectors
- 12' of tubing and insulation included
- Self priming pumps

## Options Available

- Heating
- RS-232 interface
- RS-485 interface
- Computer Communications software
- Ramping and soaking

## APPLICATIONS

Teca Liquid Chillers are ideal for bench-top or portable applications such as laboratory, laser, x-ray, out-patient and medical therapy as well as many others.

TEAM TECA
CUSTOM
ENGINEERING
Call us at 888-TECA-USA.
We're here to help!

# LIQUID CHILLERS

## Air Cooled

## 730-2700 BTH/hr

## TLC-SERIES

**TLC-1400** page 112

1400-1450 BTU/hr Rating,
12" x 14" footprint
120 or 240 VAC operation

**TLC-700** page 118

730-800 BTU/hr Rating,
12" x 7" footprint
120 VAC or 24 VDC operation

**TLC-1200** page 116

830-950 BTU/hr Rating,
15.4" x 7.6" footprint
24 VDC input

**TLC-702** page 118

730-800 BTU/hr Rating,
12" x 7" footprint
240 VAC operation

**TLC-900** page 114

1050-1350 BTU/hr Rating,
15.4" x 7.6" footprint
100-240 VAC or24 VDC operation

**TLC³** page 124

330-1250 BTU/hr Rating,
various size and voltages

## RLC-SERIES

**RLC-900** page 120

1050-1350 BTU/hr Rating,
19" X 25" X 9" Size
100-240 VAC input

**RLC-1800** page 120

2000-2700 BTU/hr Rating,
19" X 25" X 11" Size
100-240 VAC input

**RLC-1400** page 122

1400-1450 BTU/hr Rating,
19" X 25" X 9" Size
120 or 240 VAC input

# TLC-1400 | Liquid Chiller

Air Cooled | 120 VAC, 240 VAC Input

## FEATURES

- Compact (only 12" X 14" bench top footprint)
- Weighs approximately 59 lbs. (27 kg)
- Integral PID "tunable" temperature control (two styles)
- Ambient temperature up to +50°C
- No compressor, fluorocarbons or filters
- Virtually maintenance-free operation
- Remote Sensibility™
- Un-cooled, 500mL reservoir
- Front to back air-flow system
- Stainless steel exterior housing
- Low fluid level and low flow warning
- Integral power supply
- Self priming pump/reservoir
- Low pressure drop fluid quick connects
- Tubing and insulation
- 3/8" CPC low pressure drop shut off fittings
- Cool and Heat/Cool versions

## TC-3400 FEATURES

- RS-485 communications (optional)
- Communications Software (optional)

## SPECIFICATIONS

| MODEL | PART NUMBER | PERFORMANCE RATING | VOLTAGE VAC BTU/HR | CURRENT AMPS. 50/60 HZ | WEIGHT LBS. (KG) | MAX OPERATING TEMP °C | TEMP. CONTROL | HEATING OPTION (HC SUFFIX) AMBIENT | FLUID TEMP RANGE °C |
|---|---|---|---|---|---|---|---|---|---|
| TLC-1400 | 6-B0G0-0-000 | 1400-1450 | 120 VAC | 7.0 | 59 (26.7) | 50°C (+122 F) | TC-3400 | | -5/65 |
| TLC-1400HC | 6-B0G0-1-000 | 1400-1450 | 120 VAC | 7.0 | 59 (26.7) | 50° C(+122 F) | TC-3400 | 400 Watt | -5/65 |
| TLC-1402 | 6-B0G2-0-000 | 1400-1450 | 240 VAC | 4.0 | 59 (26.7) | 50°C (+122 F) | TC-3400 | | -5/65 |
| TLC-1402HC | 6-B0G2-1-000 | 1400-1450 | 240 VAC | 4.0 | 59 (26.7) | 50°C (+122 F) | TC-3400 | 400 Watt | -5/65 |

# TLC-1400

**ENVIRONMENTS**

Bench top
Laboratory
Industrial

**COOLING CAPACITY**

410 Watts @ 0 °C ΔT (standard)

## PERFORMANCE CURVE

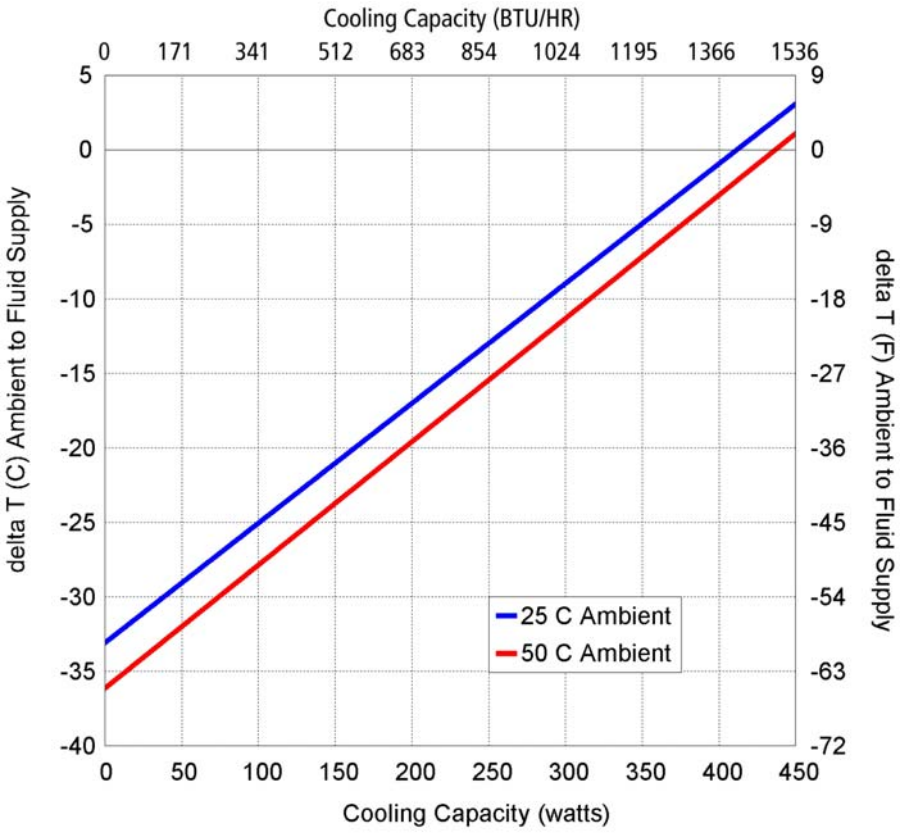


| Equation of line: y=ΔT(°C) x=Capacity (Watts) | | |
|---|---|---|
| **Ambient Temp** | **25°C** | **50°C** |
| Fluid Supply | y=.08x-33.1 | y=.08x-36.1 |

## DIMENSIONS

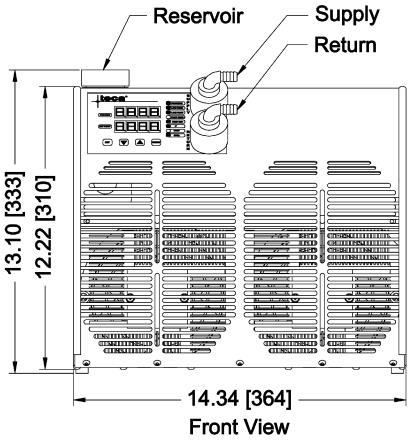


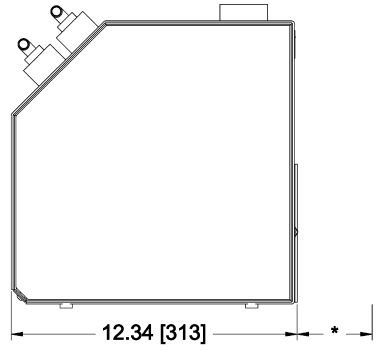


* Minimum recommended clearance 3".
Dimensions: Inches [Millimeters]

## PUMP CURVE

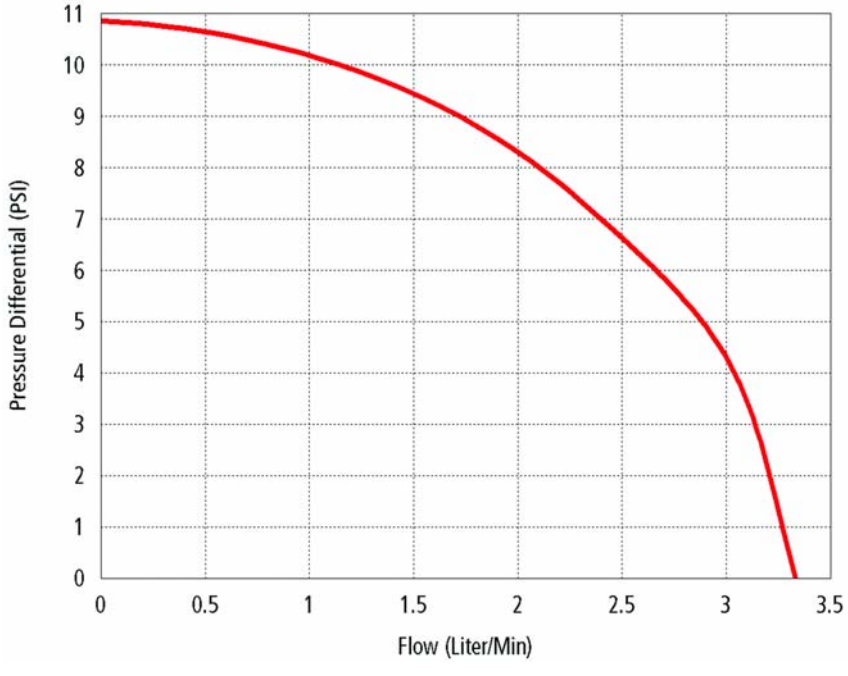

Ambient Air Path

# TLC-900 | Liquid Chiller

Air Cooled
Bench Top

100-240 VAC and 24 VDC Input

## STANDARD FEATURES

- 90-265 VAC universal integrated power supply
- Heats and cools
- 1 Liter un-cooled reservoir
- Low pressure drop 3/8 I.D. fluid quick connects
- Variable fan speed for quieter operation
- User-friendly front-fill design
- Easy prime/pump reset feature
- Wide process fluid temperature range
- Multiport bottom to top air-flow for easier bench use
- Hardwired over-temperature protection
- No compressor, fluorocarbons or filters
- Virtually maintenance-free operation

## CONTROL FEATURES

- Integral PID "tunable" temperature control
- One shot smart PID control tuning or Adaptive Smart Continuous Tuning
- Internal RTD sensor
- Remote Sensibility™ switch selectable exterior sensor
- Multi-segment ramp and soak programs
- RS-232 communications standard includes EzLog® software for easy programming, tuning and charting
- Low fluid level and low flow warning
- Process fluid "out of temperature range" warning
- No flow system shut down
- Optional software iTools®, OPC Server

## PUMP OPTIONS

- Option #1 - Standard Magnetic Drive, Can Pump, 0 to 50 °C process temperature
- Option #2 - Low Temperature Magnetic Drive, Impeller Pump, -20 to 90 °C process temperature
- Option #3 - Gear pump, 3.75 Liter/Min, -20 to 90 °C process temperature
- Option #4 - High Flow Magnetic Drive, Can Pump, 0 to 50 °C process temperature

## SPECIFICATIONS

| MODEL | PART NUMBER | PUMP OPTION | PERFORMANCE RATING BTU/HR | VOLTAGE VAC 50/60 HZ | CURRENT AMPS. | WEIGHT LBS. (KG) | MAX OPERATING AMBIENT | FLUID TEMP. RANGE °C |
|---|---|---|---|---|---|---|---|---|
| TLC-900 | 6-E4EB-1-0A1 | 1 | 1050-1100 | 100-240 | 3.5† | 42 (19) | 50 °C (+122 F) | 0 to 50 |
| TLC-900 | 6-E5EB-1-0A1 | 1 | 1260-1330 | 100-240 | 4.0† | 42 (19) | 50 °C (+122 F) | 0 to 50 |
| TLC-900 | 6-E4EB-1-0A2 | 2 | 1050-1100 | 100-240 | 3.5† | 42 (19) | 50 °C (+122 F) | -20 to 90 |
| TLC-900 | 6-E5EB-1-0A2 | 2 | 1260-1330 | 100-240 | 4.0† | 42 (19) | 50 °C (+122 F) | -20 to 90 |
| TLC-900 | 6-E4EB-1-0A3 | 3 | 1050-1100 | 100-240 | 3.5† | 42 (19) | 50 °C (+122 F) | -20 to 90 |
| TLC-900 | 6-E5EB-1-0A3 | 3 | 1260-1330 | 100-240 | 4.0† | 42 (19) | 50 °C (+122 F) | -20 to 90 |
| TLC-900 | 6-E4EB-1-0A4 | 4 | 1050-1100 | 100-240 | 3.5† | 42 (19) | 50 °C (+122 F) | 0 to 50 |
| TLC-900 | 6-E5EB-1-0A4 | 4 | 1260-1330 | 100-240 | 4.0† | 42 (19) | 50 °C (+122 F) | 0 to 50 |
| TLC-900 | 6-E4E5-1-0A1 | 1 | 1050-1100 | 24 VDC | 22 | 42 (19) | 50 °C (+122 F) | 0 to 50 |
| TLC-900 | 6-E4E5-1-0A2 | 2 | 1050-1100 | 24 VDC | 22 | 42 (19) | 50 °C (+122 F) | -20 to 90 |
| TLC-900 | 6-E4E5-1-0A3 | 3 | 1050-1100 | 24 VDC | 22 | 42 (19) | 50 °C (+122 F) | -20 to 9 |
| TLC-900 | 6-E4E5-1-0A4 | 4 | 1050-1100 | 24 VDC | 22 | 42 (19) | 50 °C (+122 F) | 0 to 50 |
| TLC-900 | 6-E5EB-1-CAS* | 1 | 1260-1330 | 100-240 | 4.0† | 42 (19) | 50 °C (+122 F) | 0 to 50 |

* This part number is ready for use with a low temperature cascade option and includes power input and control provisions to the cascade. For othe pump options for cascade unit consult the factory. Refer to pages 108 and 109 for cascades and other options available for liquid chillers.

† Refelects the current draw @ 120 VAC, 60 Hz input

# TLC-900

## ENVIRONMENTS

Bench top
Laboratory
Industrial

## COOLING CAPACITY

310 Watts @ 0 °C ΔT (standard)
360 Watts @ 0 °C ΔT (high capacity)

## PERFORMANCE CURVE

Curves below represent performance of TLC-900 with pump option 1.
Performance curves for systems with other pumps will be different.

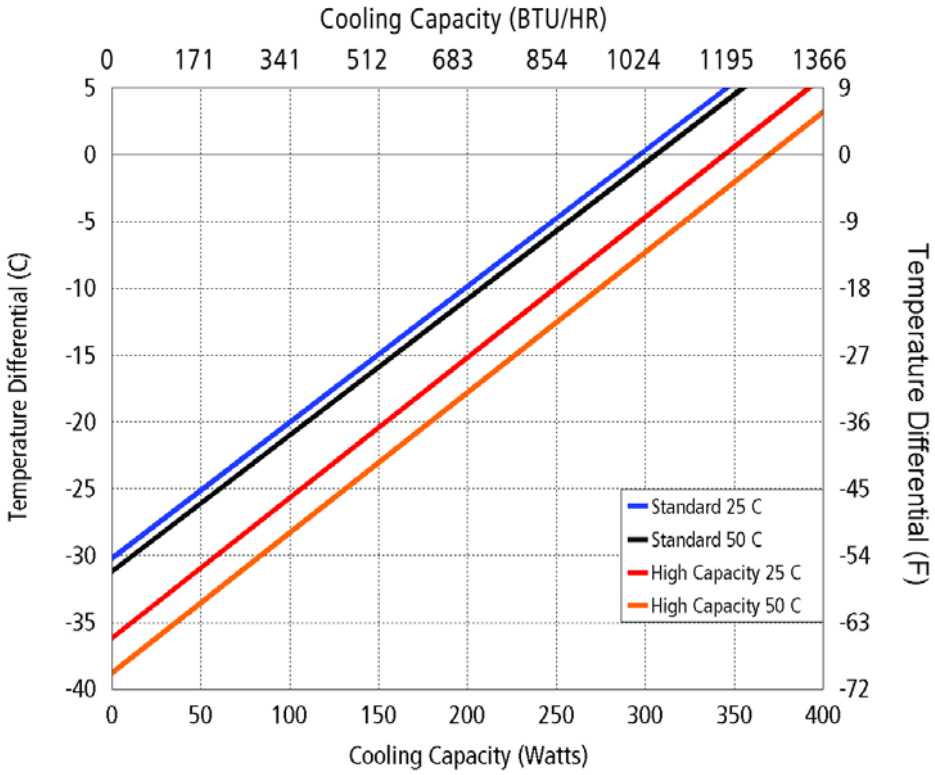


| Equation of line: y=ΔT(°C) x=Capacity (Watts) | | |
|---|---|---|
| **Ambient Temp** | **25°C** | **50°C** |
| Standard | y=.102x-30.3 | y=.102x-31.2 |
| High Capacity | y=.105x-36.2 | y=.105x-38.7 |

## PUMP CURVE

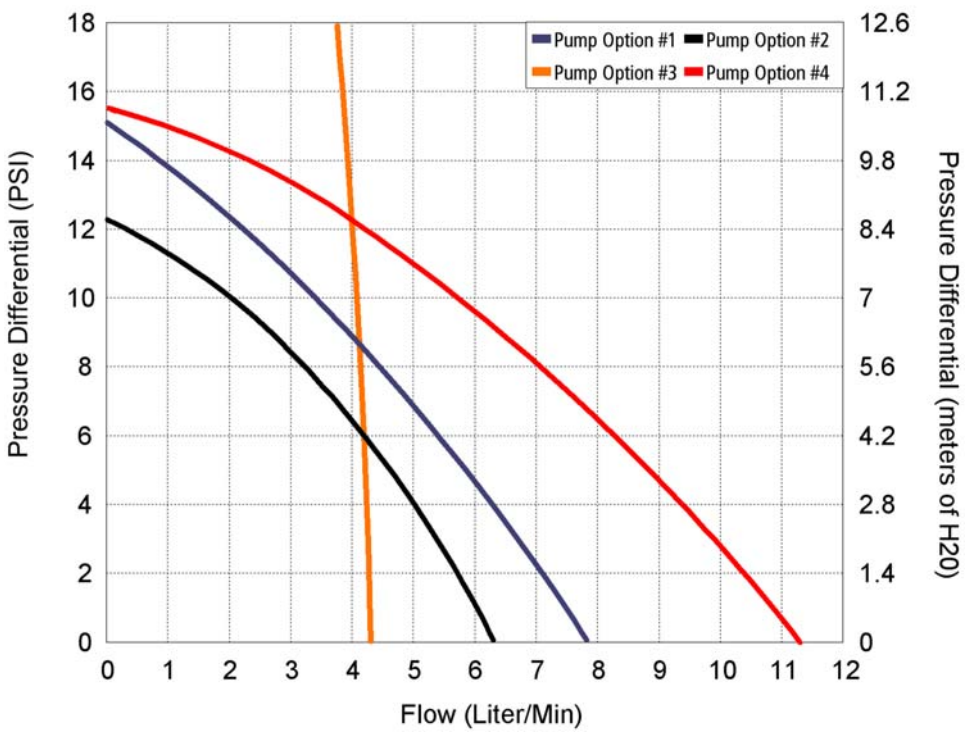


## DIMENSIONS

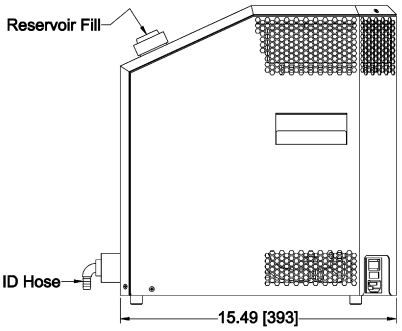


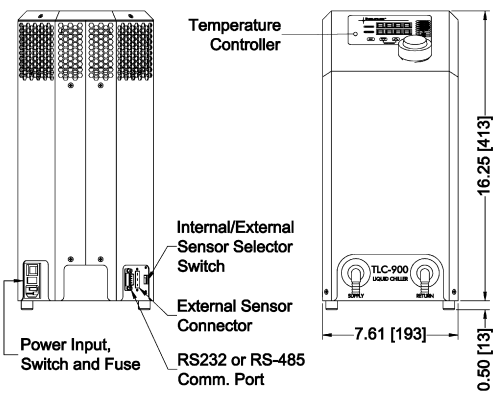


Dimensions: Inches [Millimeters]

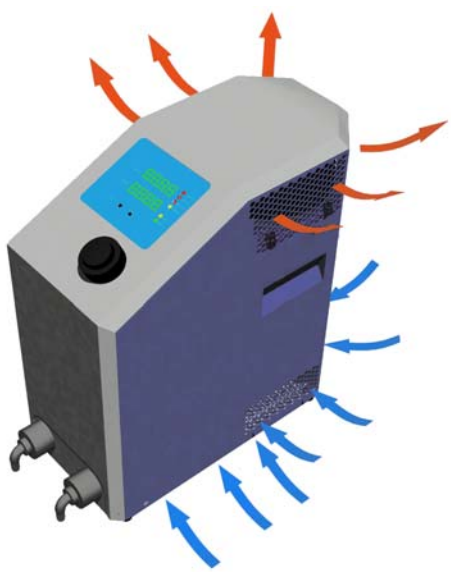

**Ambient Air Path**

# TLC-1200 | Air Cooled Liquid Chiller

Air Cooled | General Purpose 24 VDC input

## FEATURES

- Two separate fluid cooling circuits
- Weighs only 20 lbs. (9.1 kg)
- Mount through bench top or enlcosure wall
- No compressor, fluorocarbons or filters
- Virtually maintenance-free operation
- Stainless steel exterior housing
- Mounts in any orientation
- 3/8" OD Stainless steel tubing

## INCLUDES

- Internal H-Bridge for reverse polarity operation on HC versions
- Rubber feet
- Power input leads

## SPECIFICATIONS

| MODEL | PART NUMBER | PERFORMANCE RATING BTU/HR | VOLTAGE VDC | CURRENT AMPS. | WEIGHT LBS. (KG) | MAX OPERATING AMBIENT | HEATING OPTION | TEMP. CONTROL | FLUID TEMP RANGE °C |
|---|---|---|---|---|---|---|---|---|---|
| TLC-1200 | 6-3095-0-000 | 830-950 | 24 | 9.0 | 20 (9.1) | 50 °C(+122 F) | Cool Only | None | -5/65 |
| TLC-1200 | 6-3055-0-000 | 830-950 | 24 | 9.0 | 20 (9.1) | 50 °C(+122 F) | Cool Only | EXT* | -5/65 |
| TLC-1200HC | 6-3055-1-000 | 830-950 | 24 | 9.0 | 20 (9.1) | 50 °C(+122 F) | Heat/Cool | EXT** | -5/65 |

* Unit is set for 5-32 VDC external control signal, relay included

** Unit is set for 5-32 VDC external control signal, H-Bridge relay(s) included

# TLC-1200

## ENVIRONMENTS

Bench top
OEM
Industrial

## COOLING CAPACITY

Standard: 162 Watts @ 0 °C ΔT (25 °C Ambient)
High Cap: 190 Watts @ 0 °C ΔT (25 °C Ambient)

## PERFORMANCE CURVE

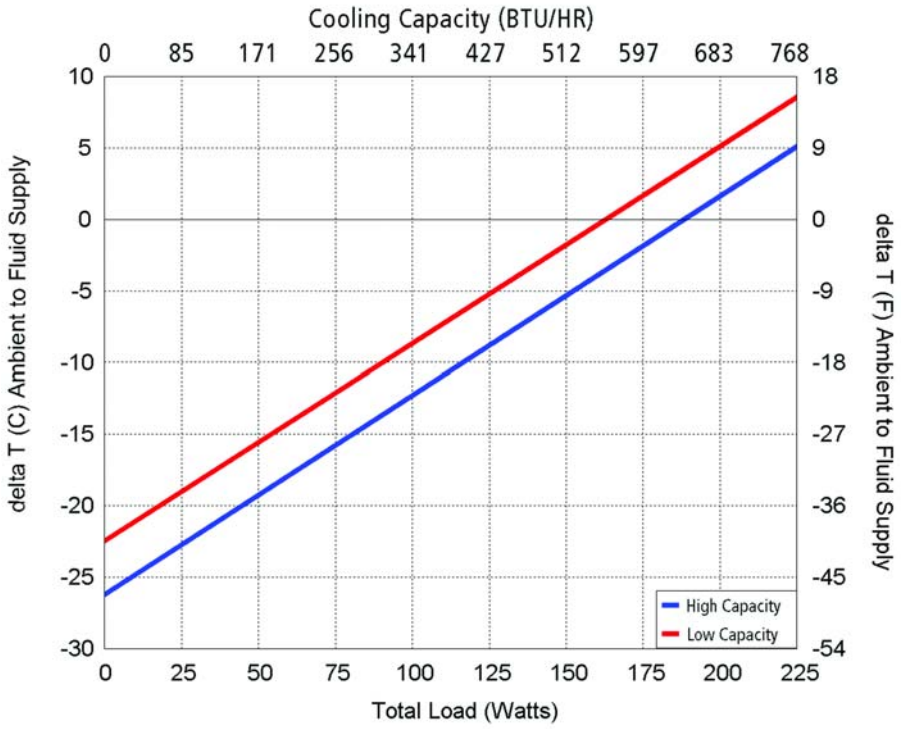


| Equation of line: y=ΔT(°C) x=Capacity (Watts) | | |
|---|---|---|
| Capacity | Standard | High |
| Fluid Supply | y=.138x-22.4 | y=.138x-26.2 |

## DIMENSIONS

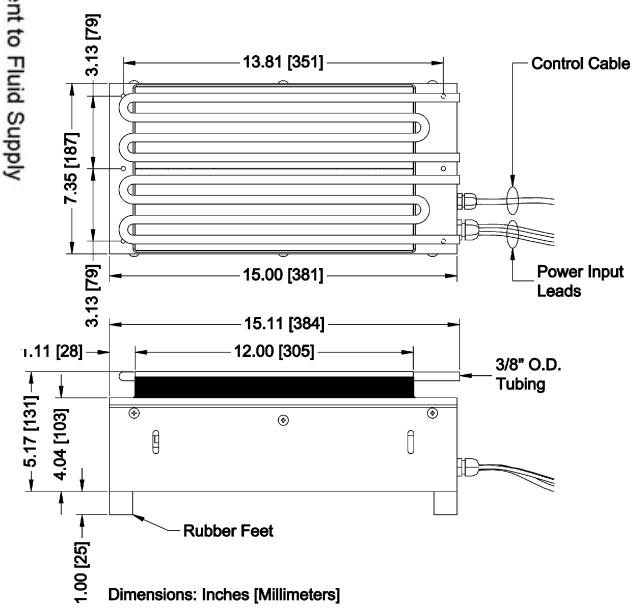


## FLOW CHARACTERISTICS

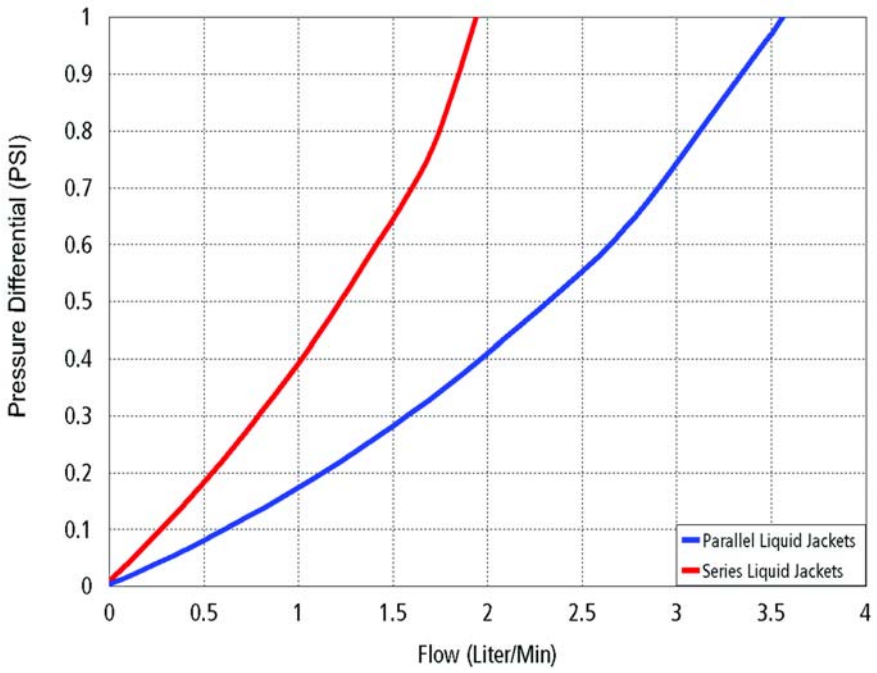


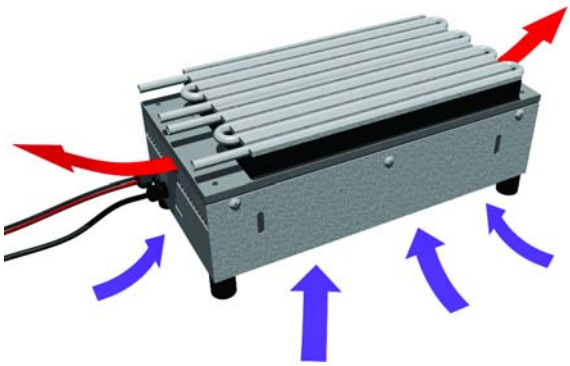

Ambient Air Path

# TLC-700 | Air Cooled Liquid Chiller

Air Cooled | 120 VAC, 240 VAC and 24 VDC Input

## FEATURES

- Compact (only 15.5" X 7.6" bench top footprint)
- Easy prime pump design
- Integral PID "tunable" temperature control (two styles)
- No compressor, fluorocarbons or filters
- Un-cooled, 500mL reservoir
- Front to back air-flow system
- Stainless steel exterior housing
- Ergonomic sloping front design
- Low fluid level and low flow warning
- Integral power supply
- Self priming pump/reservoir
- Low pressure drop fluid quick connects
- Cool and Heat/Cool versions

## TC-3300 FEATURES

- RS-232 communications (optional)
- Communications Software (optional)

## SPECIFICATIONS

| MODEL | PART NUMBER | PERFORMANCE RATING BTU/HR | VOLTAGE VAC 50/60 HZ | CURRENT AMPS. | WEIGHT LBS. (KG) | MAX OPERATING AMBIENT | HEATING OPTION (HC SUFFIX) | TEMP. CONTROL | FLUID TEMP RANGE °C | AGENCY APPROVALS (ETL) |
|---|---|---|---|---|---|---|---|---|---|---|
| TLC-700 | 6-A0D0-0-000 | 730-800 | 120 VAC | 4.2 | 32(14.5) | 50 °C(+122 F) | | TC-3300 | -5/65 | UL3101-1/CSA22.2, CE |
| TLC-700HC | 6-A0D0-1-000 | 730-800 | 120 VAC | 4.2 | 32(14.5) | 50 °C(+122 F) | 200 Watt | TC-3300 | -5/65 | UL3101-1/CSA22.2, CE |
| TLC-702 | 6-A0D2-0-000 | 730-800 | 240 VAC | 2.9 | 42(19) | 50 °C(+122 F) | | TC-3300 | -5/65 | UL3101-1/CSA22.2, CE |
| TLC-702HC | 6-A0D2-1-000 | 730-800 | 240 VAC | 2.9 | 42(19) | 50 °C(+122 F) | 200 Watt | TC-3300 | -5/65 | UL3101-1/CSA22.2, CE |

# TLC-700

**ENVIRONMENTS**

Bench top
Laboratory
Industrial

**COOLING CAPACITY**

215 Watts @ 0 °C ΔT

## PERFORMANCE CURVE

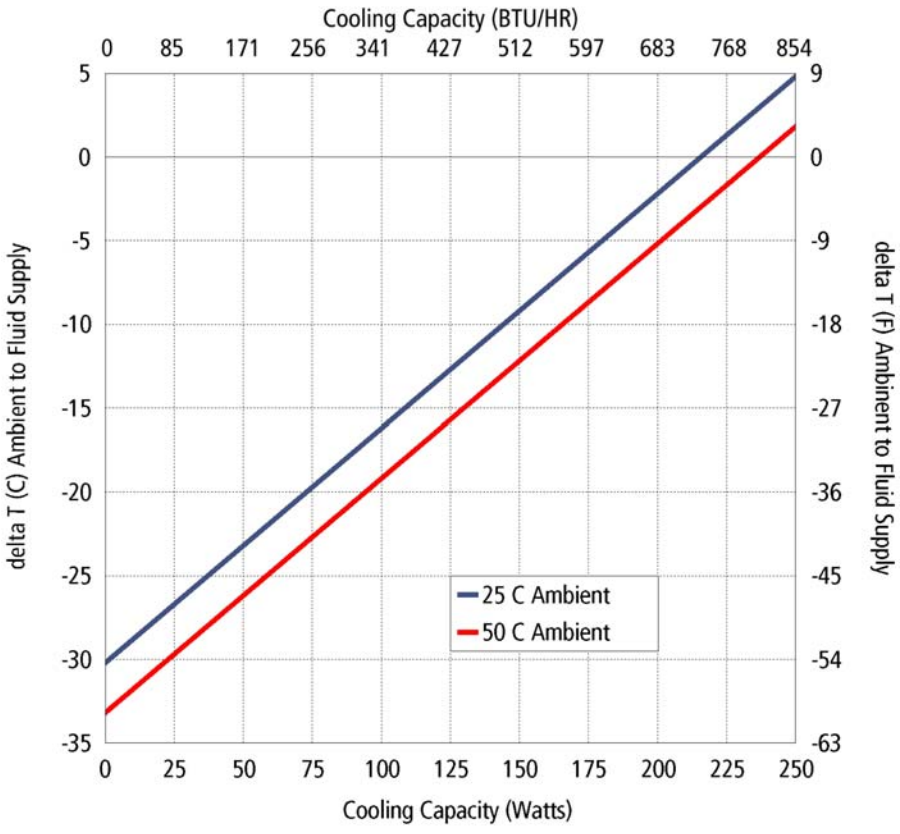


| Equation of line: y=ΔT(°C) x=Capacity (Watts) | | |
|---|---|---|
| **Ambient Temp** | **25°C** | **50°C** |
| Fluid Supply | y=.14x-30.2 | y=.14x-33.2 |

## PUMP CURVE

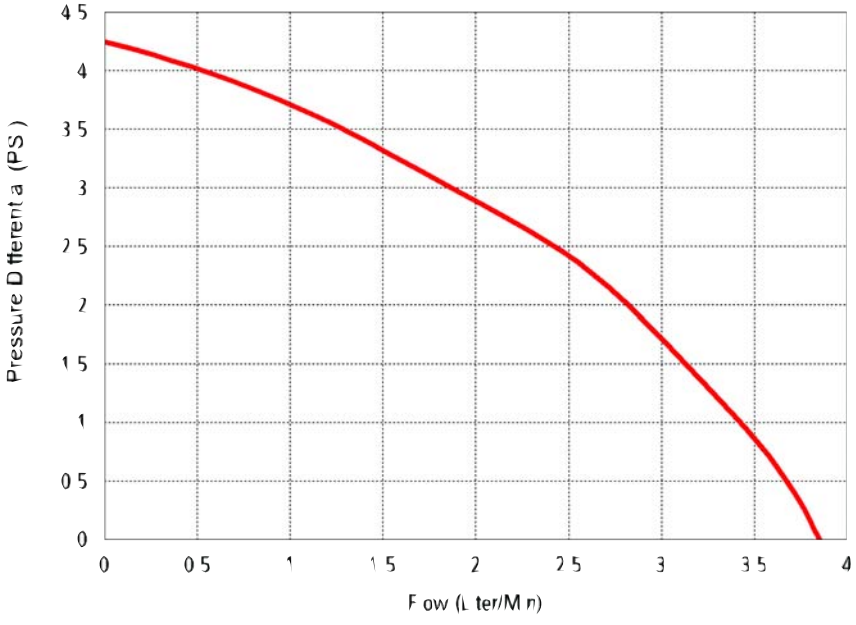


## DIMENSIONS

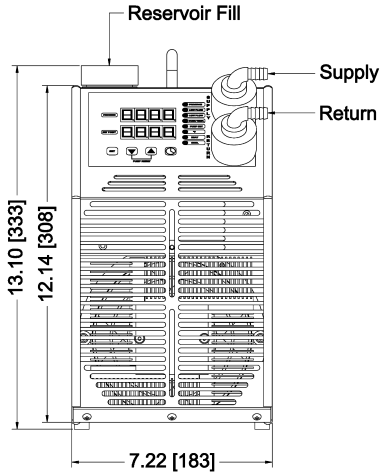


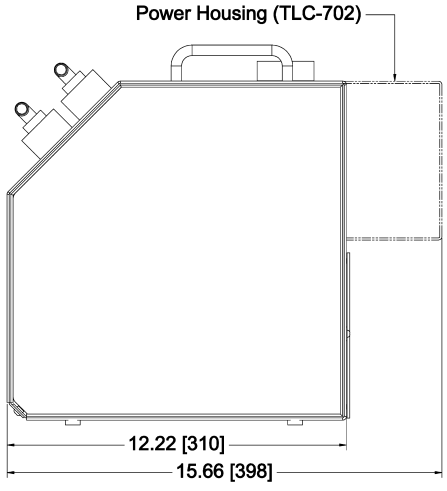


Dimensions: Inches [Millimeters]

Ambient Air Path

# RLC-900 | Rack Mount Liquid Chiller

# RLC-1800

100-240 VAC Input

Air Cooled
Rack Mount

## FEATURES

- Compact only 19" x 25" x 9"
- Standard 19" rack mounting
- Integral PID "Tuneable" temperature control
- Remote sensibility™
- Ambient to +50°C
- No compressor, fluorocarbons
- Virtually maintenance-free operation
- Stainless steel exterior housing
- Low fluid/flow warning
- External washable air filter

## INCLUDES

- Integral power supply
- Self priming pump/reservoir
- TC-4300 temperature Control
- Low pressure drop fluid quick connects
- RS-232 interface
- Computer communication software

## PUMP OPTIONS

- Option #1 - Standard Magnetic Drive, Can Pump, 0 to 50 °C process temperature
- Option #2 - Low Temperature Magnetic Drive, Impeller Pump, -20 to 90 °C process temperature
- Option #3 - Gear pump, 3.75 Liter/Min, -20 to 90 °C process temperature
- Option #4 - High Flow Magnetic Drive, Can Pump, 0 to 50 °C process temperature

## SPECIFICATIONS

| MODEL | PART NUMBER | PUMP OPTION | PERFORMANCE RATING BTU/HR | VOLTAGE VAC 50/60 HZ | CURRENT AMPS. | WEIGHT LBS. (KG) | MAX OPERATING AMBIENT | FLUID TEMP. RANGE °C |
|---|---|---|---|---|---|---|---|---|
| RLC-900 | 8-E4EB-1-0A1 | 1 | 1050-1100 | 100-240 | 3.5* | 42 (19) | 50 °C (+122 F) | 0 to 50 |
| RLC-900 | 8-E4EB-1-0A2 | 2 | 1050-1100 | 100-240 | 3.5* | 42 (19) | 50 °C (+122 F) | -20 to 90 |
| RLC-900 | 8-E4EB-1-0A3 | 3 | 1050-1100 | 100-240 | 3.5* | 42 (19) | 50 °C (+122 F) | -20 to 90 |
| RLC-900 | 8-E4E2-1-0A4 | 4 | 1050-1100 | 100-240 | 3.5* | 42 (19) | 50 °C (+122 F) | 0 to 50 |
| RLC-1800 | 8-04EB-1-0A1 | 1 | 2000-2200 | 100-240 | 7.0 | 50 (23) | 50 °C (+122 F) | -0 to 50 |
| RLC-1800 | 8-04EB-1-0A2 | 2 | 2000-2200 | 100-240 | 7.0 | 50 (23) | 50 °C (+122 F) | -20 to 90 |
| RLC-1800 | 8-04EB-1-0A3 | 3 | 2000-2200 | 100-240 | 7.0 | 50 (23) | 50 °C (+122 F) | -20 to 90 |
| RLC-1800 | 8-04EB-1-0A4 | 4 | 2000-2200 | 100-240 | 7.0 | 50 (23) | 50 °C (+122 F) | -0 to 50 |

* Refelects current draw @ 120 VAC, 60 Hz input

# RLC-900/RLC-1800

## ENVIRONMENTS

19" rack mount

Laboratory

Industrial

## COOLING CAPACITY

310 Watts @ 0 °C ΔT (RLC-900)

620 Watts @ 0 °C ΔT (RLC-1800)

## PERFORMANCE CURVE

Curves below represent performance of systems with pump option 1.
Performance curves for systems with other pumps will be different.

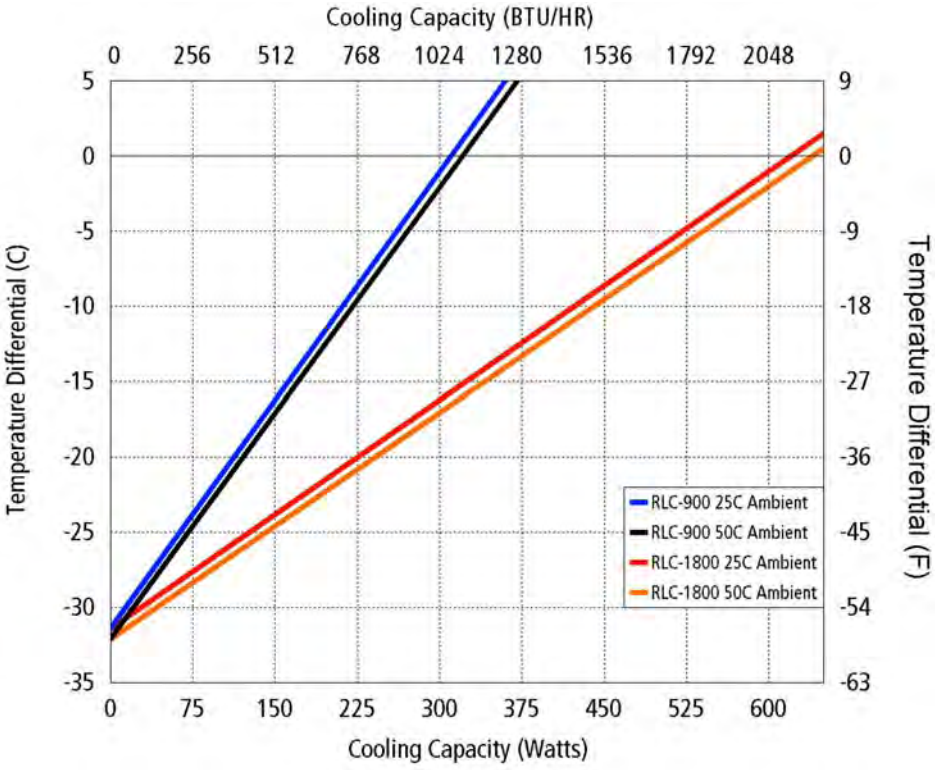


| Equation of line: y=ΔT(°C) x=Capacity (Watts) | | |
|---|---|---|
| Ambient Temp | 25°C | 50°C |
| RLC-900 | y=.101x-31.4 | y=.100x-32.1 |
| RLC-1800 | y=.05x-31.4 | y=.05x-32.1 |

## PUMP CURVE

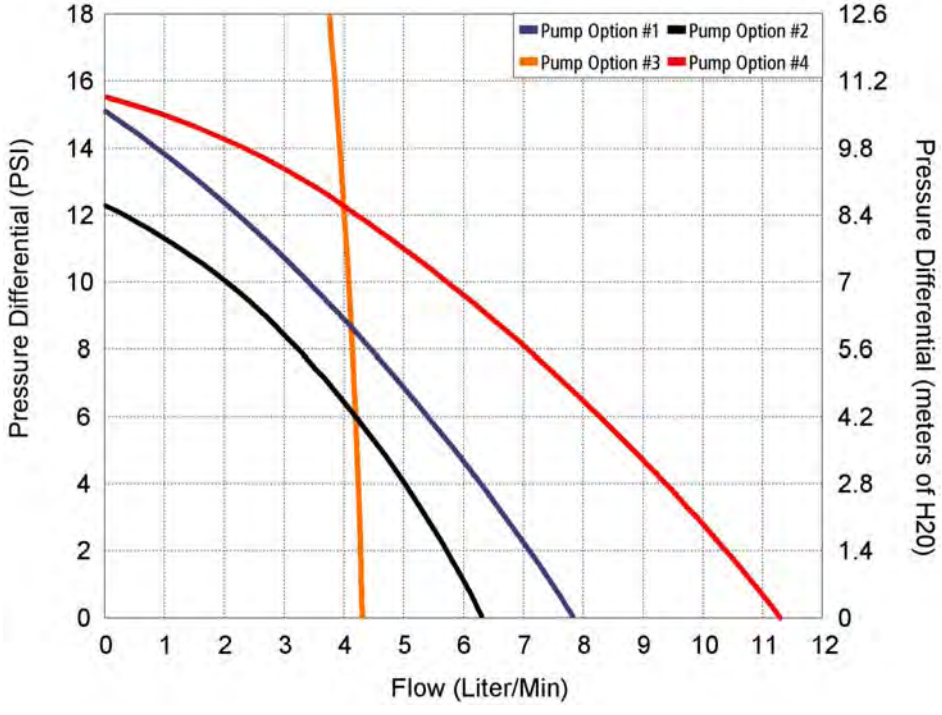


## DIMENSIONS

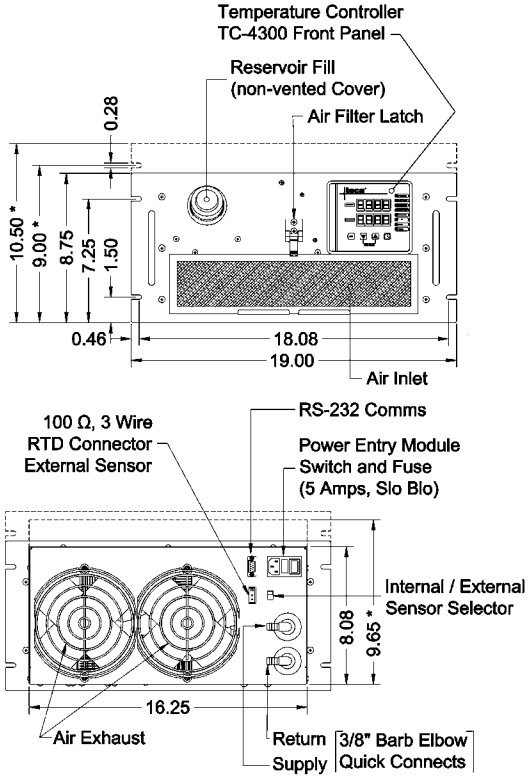


* Indicates RLC-1800 dimensions
Dimensions: Inches

Ambient Air Path

# RLC-1400 | Rack Mount Liquid Chiller

Air Cooled
Rack Mount

120 VAC, 240 VAC Input

## FEATURES

- Compact only 19" x 25" x 9"
- Standard 19" rack mounting
- Integral PID "Tuneable" temperature control
- Remote sensibility™
- Ambients to +50ºC
- No compressor, fluorocarbons
- Virtually maintenance-free operation
- Stainless steel exterior housing
- Low fluid/flow warning

## INCLUDES

- Integral power supply
- Self priming pump/reservoir
- TC-3400 temperature Control
- Low pressure drop fluid quick connects

## OPTIONS

- Heating
- RS-485 interface, RS-232 interface (with external adapter)
- Computer communication software

## SPECIFICATIONS

| MODEL | PART NUMBER | PERFORMANCE RATING BTU/HR | VOLTAGE VAC 50/60 HZ | CURRENT AMPS. | WEIGHT LBS. (KG) | MAX OPERATING AMBIENT | HEATING OPTION (HC SUFFIX) | FLUID TEMP RANGE °C |
|---|---|---|---|---|---|---|---|---|
| RLC-1400 | 8-B0G0-0-000 | 1400-1450 | 120 VAC | 7.0 | 59(26.7) | 50 °C(+122 F) | | -5/65 |
| RLC-1400HC | 8-B0G0-1-000 | 1400-1450 | 120 VAC | 7.0 | 59(26.7) | 50 °C(+122 F) | 400 Watt | -5/65 |
| RLC-1402 | 8-B0G2-0-000 | 1400-1450 | 240 VAC | 7.0 | 59(26.7) | 50 °C(+122 F) | | -5/65 |
| RLC-1402HC | 8-B0G2-1-000 | 1400-1450 | 240 VAC | 7.0 | 59(26.7) | 50 °C(+122 F) | 400 Watt | -5/65 |

# RLC-1400

## ENVIRONMENTS

19" rack mount
Laboratory
Industrial

## COOLING CAPACITY

410 Watts @ 0 °C ΔT

## PERFORMANCE CURVE

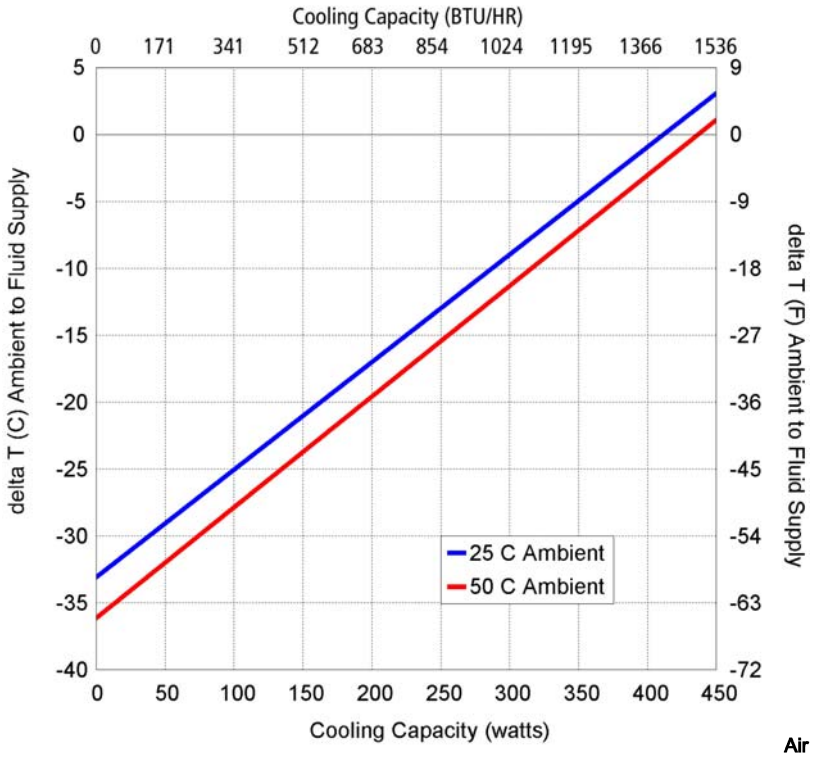


| Equation of line: y=ΔT(°C) x=Capacity (Watts) | | |
|---|---|---|
| Ambient Temp | 25°C | 50°C |
| Fluid Supply | y=.08x-33.1 | y=.08x-36.1 |

## DIMENSIONS

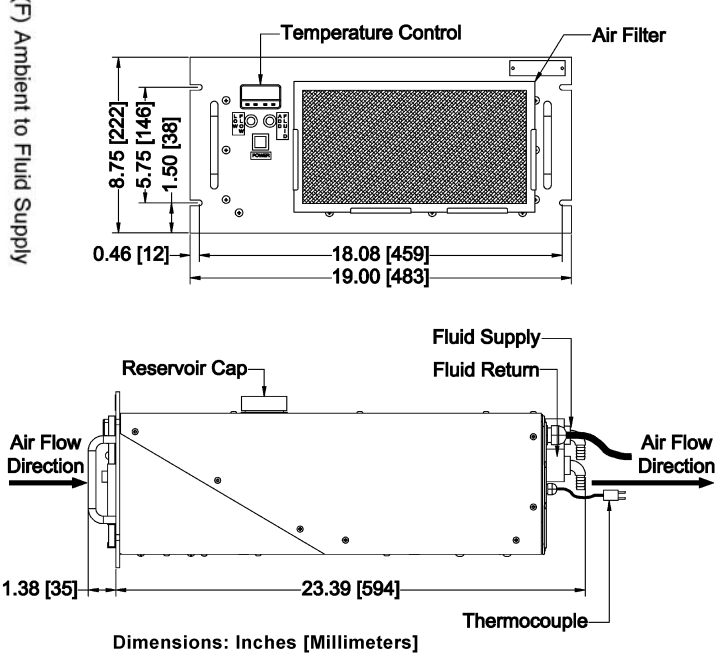


Dimensions: Inches [Millimeters]

## PUMP CURVE

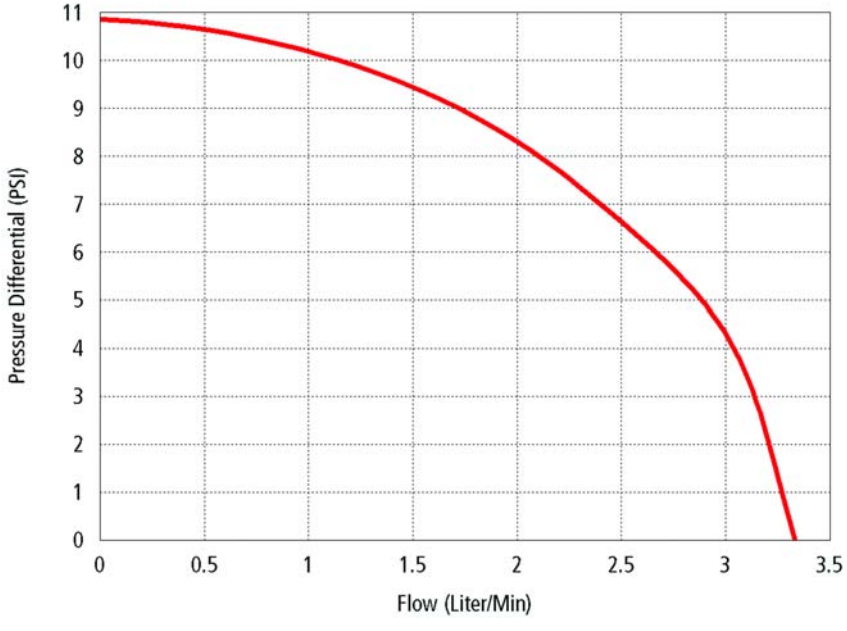


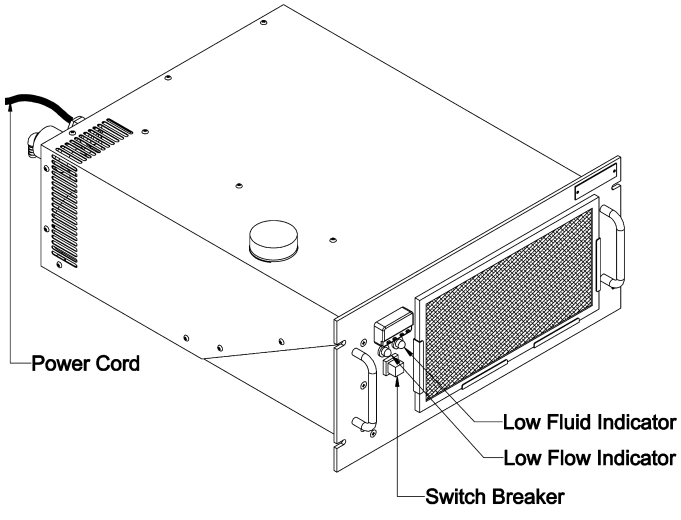

# TLC³ | Thermoelectric Cooling Cube

Air Cooled

## FEATURES

- Customized to fit your application
- In process fluid cooling
- Gas cooling/drying
- Aluminum hot side heat exchanger
- Aluminum cold side heat exchanger
- Various DC inputs and efficiencies
- Special finishes and materials on request
- Many fan options
- 4 and 6 pass heat exchanger
- Input/output fitting options
- Heating options

## REQUIRED (NOT INCLUDED)

- Pump
- Power supply
- Tubing
- Fan
- Housing

## NOTES

TECA model TLC³ cooling cubes are thermoelectric cooling "engines" that the engineer or designer can use in OEM systems. Generally these are made in 100, 200 and 300 Watts capacity range, they work with a variety of fans. Small or large quantities available.

# TLC³

330-1250 BTU/hr

## PERFORMANCE CURVE

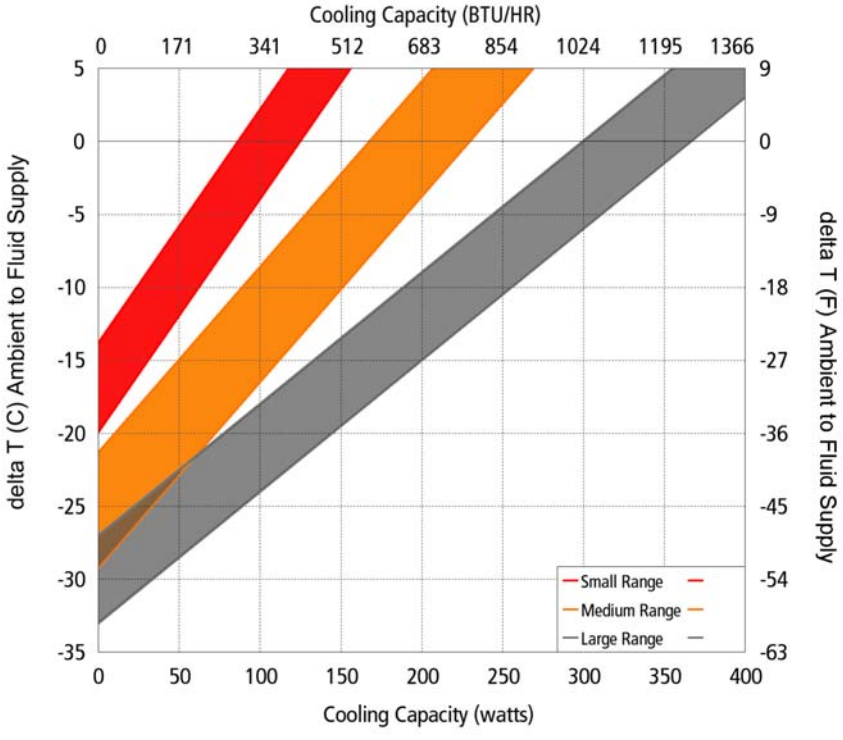


## DIMENSIONS

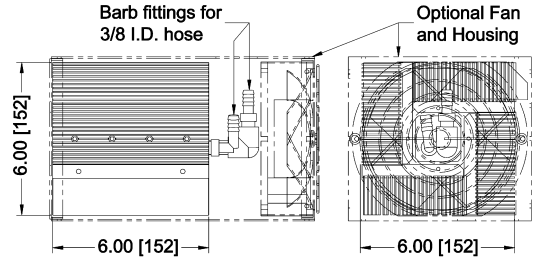


Small TLC³ chiller

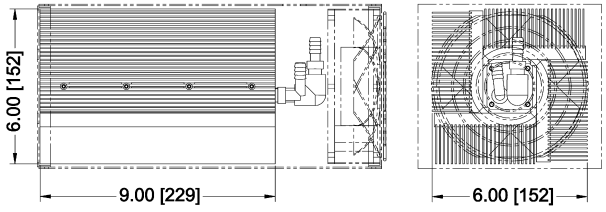


Medium TLC³ chiller

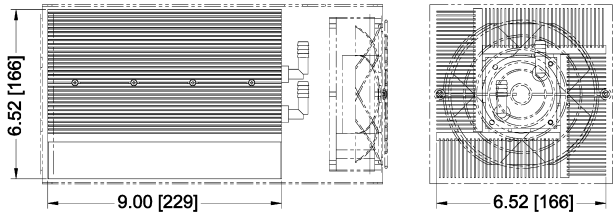


Large TLC³ chiller

Dimensions: Inches[Millimeters] Housing and fan shown for reference

## FLOW CHARACTERISTICS

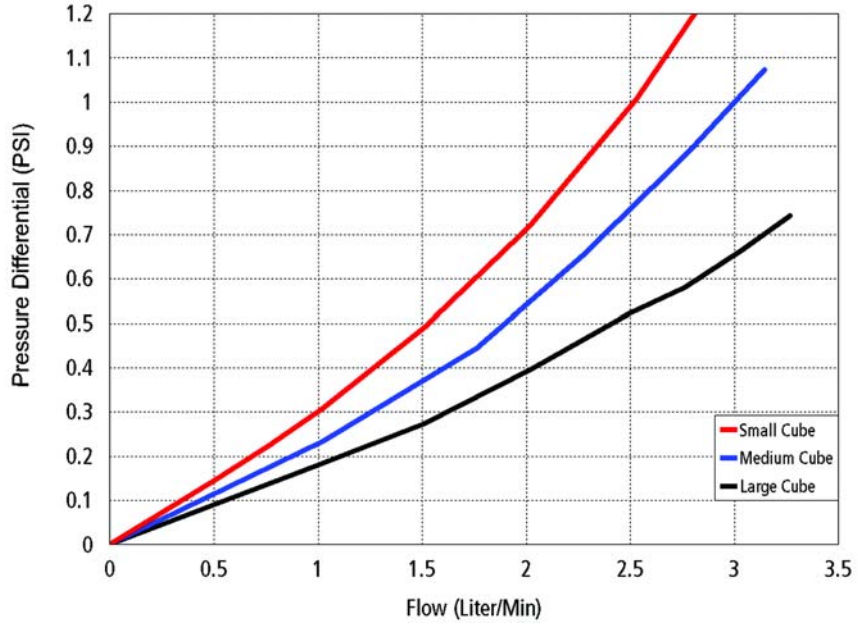


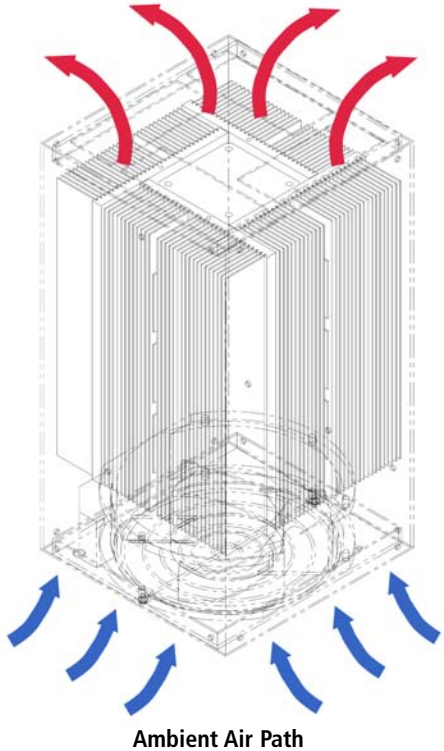

Ambient Air Path

## HEAT EXCHANGERS

### COLD PLATES

Turn your TLC water chiller into a direct contact cooler using these cold plates. Modify them with your required taps and machining, mount your components, run the flexible hose to the chiller and turn it on. With care the remote sensor feature on select TLC models can be used to control the temperature of the plate or the item being cooled.

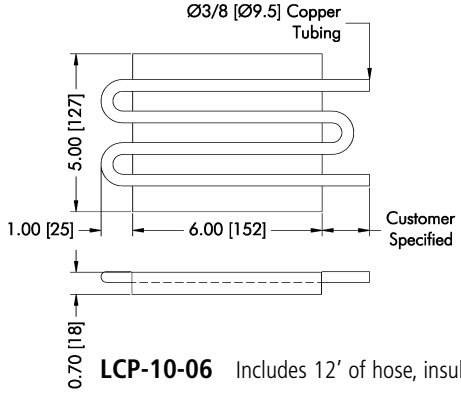


**LCP-10-06** Includes 12' of hose, insulation and fittings

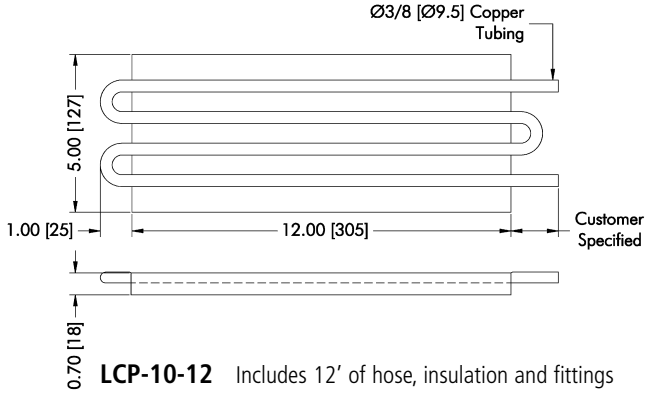


**LCP-10-12** Includes 12' of hose, insulation and fittings

### FAN COILS

Use your liquid chiller to cool an enclosure or a flow of air. Cool the inside of your glove box with little vibration and no big holes or air conditioner on the back. Mount the fan coils in your glove box, run the flexible tubing through a port or bulkhead fitting on your glove box to the liquid chiller and begin cooling.

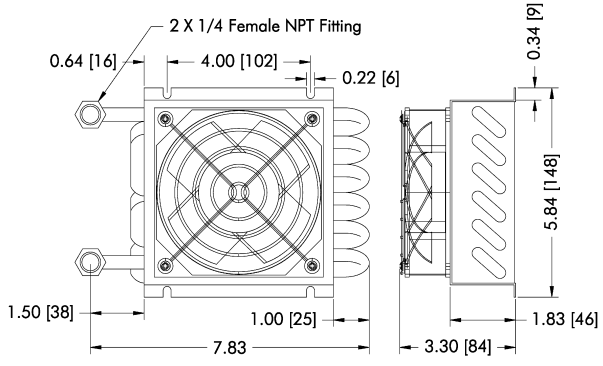


**FC10-01** Includes fan, guard, 12' of hose, insulation and fittings

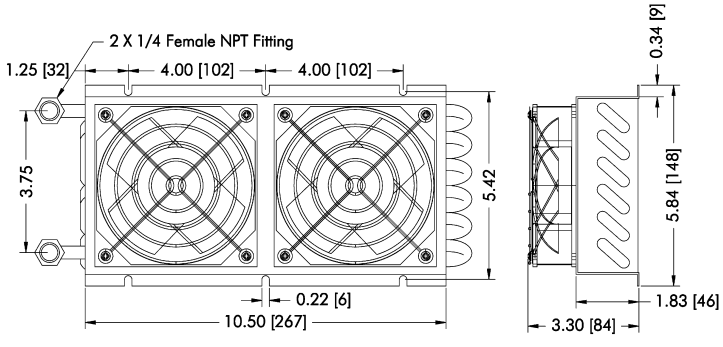


**FC20-01** Includes fan, guard, 12' of hose, insulation and fittings

**Dimensions: Inches [Millimeters]**

## FITTINGS AND QUICK CONNECTS

### MALE QUICK CONNECT WITH NPT

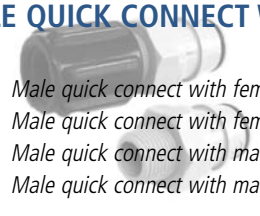

| | |
|---|---|
| **QCM-F3/8NPT** | *Male quick connect with female 3/8 NPT* |
| **QCM-F1/4NPT** | *Male quick connect with female 1/4 NPT* |
| **QCM-M1/2NPT** | *Male quick connect with male 1/2 NPT* |
| **QCM-M3/8NPT** | *Male quick connect with male 3/8 NPT* |

### MALE QUICK CONNECT - HIGH TEMPERATURE

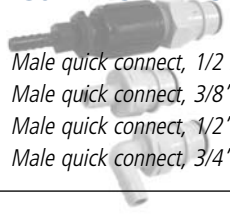

| | |
|---|---|
| **QCHM-M1/2NPT** | *Male quick connect, 1/2 MNPT* |
| **QCHM-3/8B** | *Male quick connect, 3/8" barb* |
| **QCHM-1/2B** | *Male quick connect, 1/2" barb* |
| **QCHM-3/4B** | *Male quick connect, 3/4" barb* |

### MALE QUICK CONNECT WITH BARB

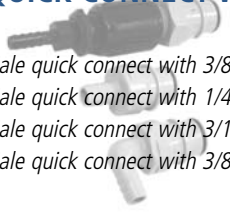

| | |
|---|---|
| **QCM-3/8B** | *Male quick connect with 3/8" barb* |
| **QCM-1/4B** | *Male quick connect with 1/4" barb* |
| **QCM-3/16B** | *Male quick connect with 3/16" barb* |
| **QCM-3/8BE** | *Male quick connect with 3/8" barb elbow* |

### MISC. QUICK CONNECTS

| | |
|---|---|
| **QCM-FPLCD** | *Male quick connect with female PLCD* |
| **QCF-M3/8NPT** | *Female quick connect with male 3/8 NPT* |

## LOW TEMPERATURE CASCADES FOR USE WITH LIQUID CHILLERS

One thermoelectric stacked on top of another with the goal of increasing the maximum temperature differential is a "cascade". Use these assemblies with the liquid chiller to create 2 and 3 stage cascades. The performance will vary with the degree of insulation, with the amount of the active load and with the ambient temperature.

### TWO STAGE - LARGE PLATE

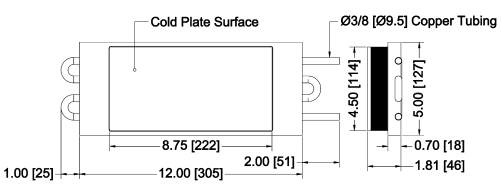


### TWO STAGE - SMALL PLATE

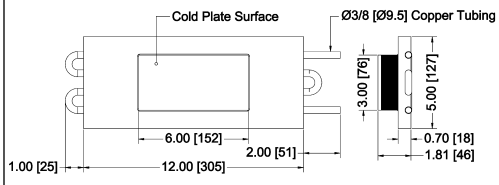


### THREE STAGE

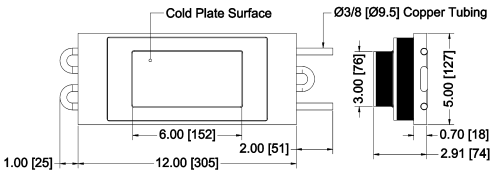


**LCP-22**

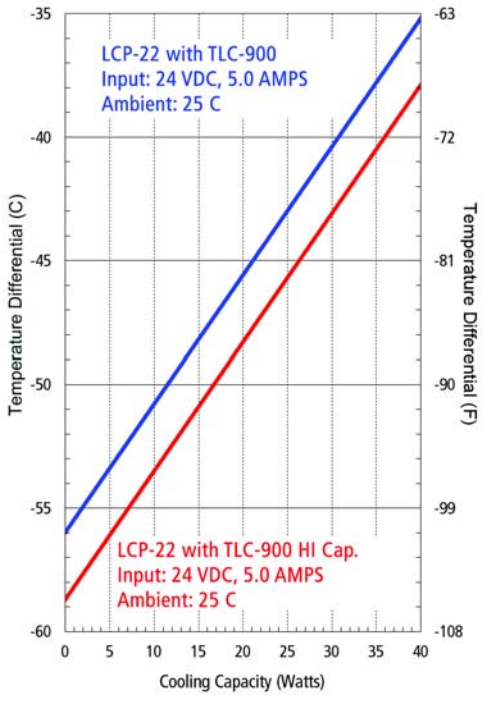


**LCP-21**

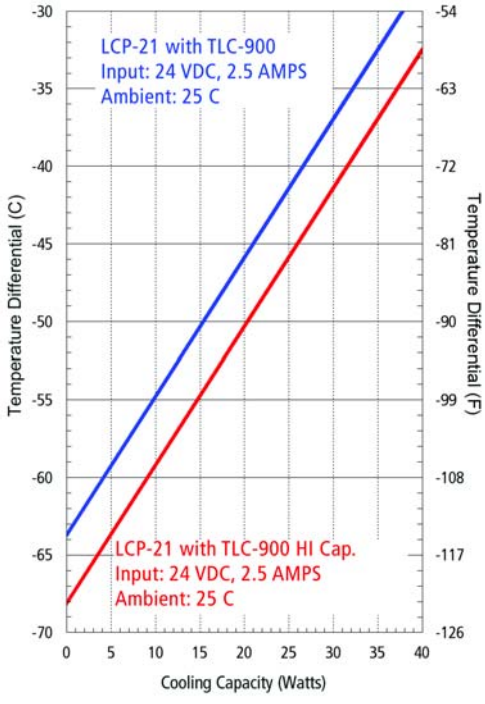


**LCP-31**

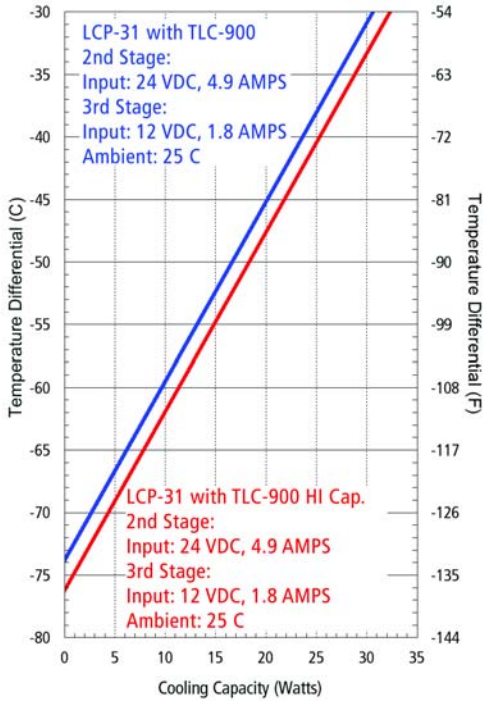


## MISC. ACCESSORIES

### RTD SENSOR

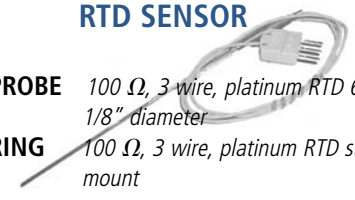

**RTD-PROBE** *100 Ω, 3 wire, platinum RTD 6" long, 1/8" diameter*

**RTD-RING** *100 Ω, 3 wire, platinum RTD surface mount*

### CONVERTER

**C-USB** *USB-RS-232 converter "includes adapter, cable and software"*

### CABLE

**C-RS232** *RS-232 Cable, DB9 Male to DB9 Female 10' long*

### HOSE

**HOSE-01** *Standard hose, 3/8" ID, per foot*

**HOSE-02** *High temperature hose, 3/8" ID, per foot*

Purchase by the foot

### INSULATION

**INS-01** *Single hose insulation, 5/8" ID*

6' Lengths

### FILTERS

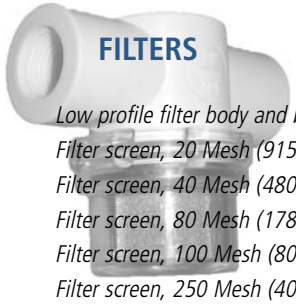

**FBL-100** *Low profile filter body and bowl*
**FML-20** *Filter screen, 20 Mesh (915 Micron)*
**FML-40** *Filter screen, 40 Mesh (480 Micron)*
**FML-80** *Filter screen, 80 Mesh (178 Micron)*
**FML-100** *Filter screen, 100 Mesh (80 Micron)*
**FML-250** *Filter screen, 250 Mesh (40 Micron)*

# Temperature Controls
# Power Supplies

## CONTROLS — BEHIND PANEL

## CONTROLLERS — THROUGH PANEL, 1/32 DIN

**TC-3400** page 134

PID Controller

## SWITCHES — TEMPERATURE SWITCHES AND RELAYS

**TC-1F** page 138

For cool and heat/cool
air conditioners
single set point
120/240 VAC; 12/24/48 VDC

**TC-3F** page 138

For heat/cool air conditioners
two preset setting 35C and 15C
120/240 VAC; 12/24 VDC

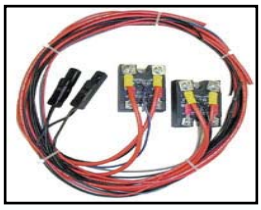

## ACCESSORIES — TC ACCESSORIES, POWER SUPPLIES

**Relay Packs** page 139

Single, Dual and Quad relay packs for cool only,heat/cool and reverse polarity applications

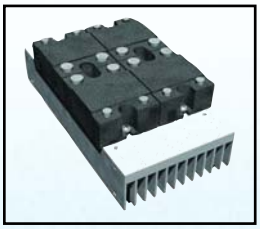

**Sensors** page 140

Thermocouples, RTD's and probes

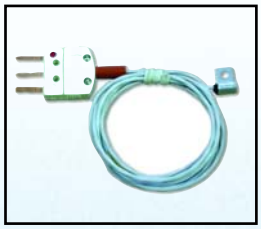

## CIRCUIT BOARD

**TC-4600** page 132
PWM Controller

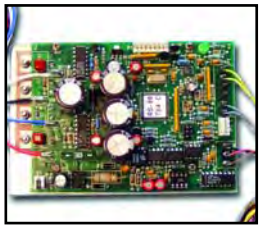

## 1/32 DIN

**TC-3500** page 136
PID Controller

## RELAYS

**TC-6F** page 138

For cool only air conditioners
three preset setting 35C, 25C
& continuous
120/240 VAC, 12/24/48 VDC

**TC-7F** page 138

For Heat/cool air conditioners
two preset setting 35C, 10C
& 20C heat exchanger mode
24 VDC

## POWER SUPPLIES

**Comms** page 140

RS-232 board, USB-RS232
converter, comms cable

**Power Supplies**
page 141

Switching power supplies

# TC-4600 | Temperature Controller

PWM Temperature Control
RS-232 Comms.

Pulse Width Modulating Temperature Controller

## OVERVIEW

The TC-4600 is a bi-directional (heat/cool), H-bridge controller designed to control thermoelectric cooling/heating units with the option to set as unidirectional. The controller accepts an input voltage of 12-36VDC. The output voltage can range from 0 to 36VDC if a split supply is used. The load circuit is pulse width modulated at 2.7KHz and delivers a load of 0.1 to 25 Amps. Temperature resolution for this controller is 0.01°C, providing exceptional control stability in a well designed thermal system.

The H-bridge configuration allows for a seamless transition between heating and cooling. Using a PC with an RS232 interface, the controller can be set for any of the following control configurations: On/Off control, differential temperature control, manual control or any combination of PID control. The user friendly software requires no programming experience to set up the controller. The RS232 interface has 1500 VAC isolation from all the electronic circuitry minimizing the interference from noise or errant signals. Once the controller is set up, the computer may be disconnected and the controller becomes a stand alone unit. If the computer is left connected, it can be used for data acquisition in a half duplex mode.

The temperature may also be set through the optional display or through a remote potentiometer.The PC software also provides for several alarm types and the controller has 3 ou puts for alarms with a 5VDC output rated for 25mA of current. In the set up menu the alarm function may be set as no alarm, tracking alarm, fixed value alarm or computer controlled alarm. The menu also offers selections for latching and for maintaining or cutting the power during an alarm. The alarm sensor may by the control temperature sensor or a secondary sensor.

## FEATURES

- Full H-Bridge Control
- Fully PC Programmable
- P,I,D or On/Off Control
- PC Configurable Alarm Circuit
- 0-36VDC Output Using Split Power Supply
- RS232 Communication Port
- RoHS Compliant
- Set Temperature range of -40°C to 250°C dependent on sensor selection

## ACCESSORIES

- Model TC-4600D Display: 4 Digit temperature readout for displaying set temperature or actual temperature with capability to adjust the set temperature.
- HS optional Heat Sink: Recommended for applications using 15A of load or greater.
- Thermistor-K: 2000 Ω +/- 2% at 25 °C, best for (-20 °C to 30 °C) range
- Thermistor-Z: 10000 Ω +/- 2% at 25 °C, best for (0 °C to 50 °C) range

## SPECIFICATIONS

- Input Voltage: 12VDC to 36VDC
- Output Voltage: 0 to 36VDC with split supply
- Load Current: 0.1A to 25A
- Bandwidth: 0.1°C to50°C
- Integral: 0 to 10 repeats per minute
- Derivative: 0 to 10 minutes
- PWM Base Frequency: 2.7 KHz
- Ambient Temperature range: -20°C to 70°C
- Power Dissipation: <10 Watts
- Process Control Rate: 90 times per second
- Output Power Resolution: ±0.2%

## PART NUMBER AND ORDERING

| MODEL NUMBER | PART NUMBER | COMMS | OPERATING VOLTAGE VDC | SWITCHING VOLTAGE VDC | MAX. SWITCHING CURRENT AMPS. | HEAT SINK | SENSOR | SENSOR RANGE (°C) | DISPLAY |
|---|---|---|---|---|---|---|---|---|---|
| TC-4600 | 46-44O-41-000 | RS-232 | 12-36 | 0-36 | 15* | none | Thermistor-K | -20 to 30 | none |
| TC-4600 | 46-44O-41-001 | RS-232 | 12-36 | 0-36 | 15* | none | Thermistor-K | -20 to 30 | included |
| TC-4600 | 46-44O-51-000 | RS-232 | 12-36 | 0-36 | 15* | none | Thermistor-Z | 0 to 50 | none |
| TC-4600 | 46-44O-51-001 | RS-232 | 12-36 | 0-36 | 15* | none | Thermistor-Z | 0 to 50 | included |
| TC-4600 | 46-44P-41-000 | RS-232 | 12-36 | 0-36 | 25 | included | Thermistor-K | -20 to 30 | none |
| TC-4600 | 46-44P-41-001 | RS-232 | 12-36 | 0-36 | 25 | included | Thermistor-K | -20 to 30 | included |
| TC-4600 | 46-44P-51-000 | RS-232 | 12-36 | 0-36 | 25 | included | Thermistor-Z | 0 to 50 | none |
| TC-4600 | 46-44P-51-001 | RS-232 | 12-36 | 0-36 | 25 | included | Thermistor-Z | 0 to 50 | included |

* Can switch up to 25 AMPS if used with heat sink

# TC-4600

## WIRING

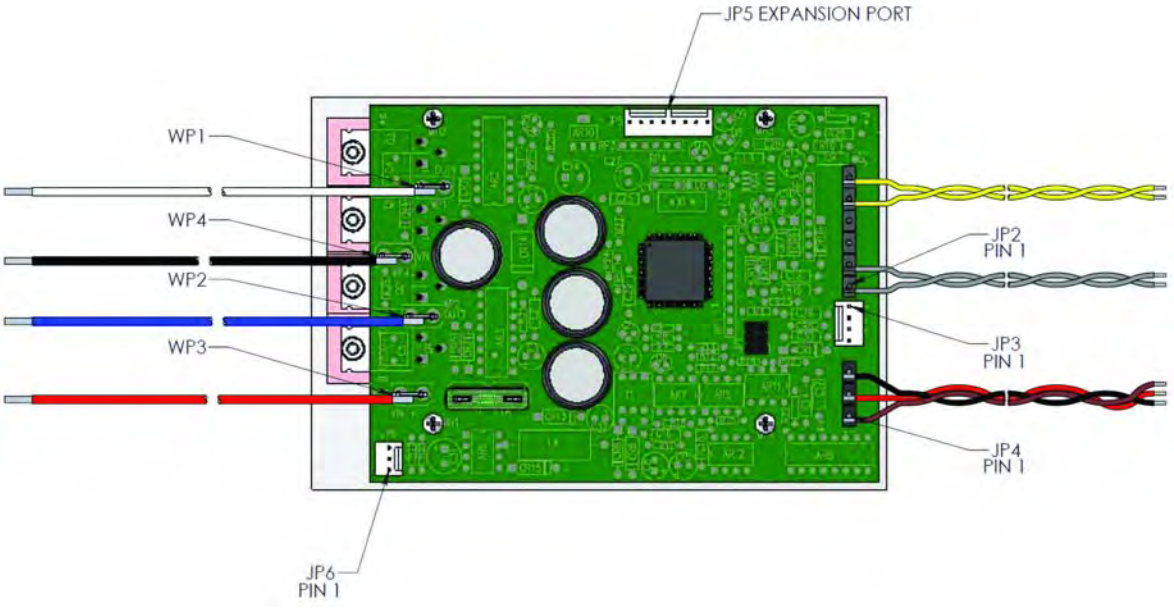


## DIMENSIONS

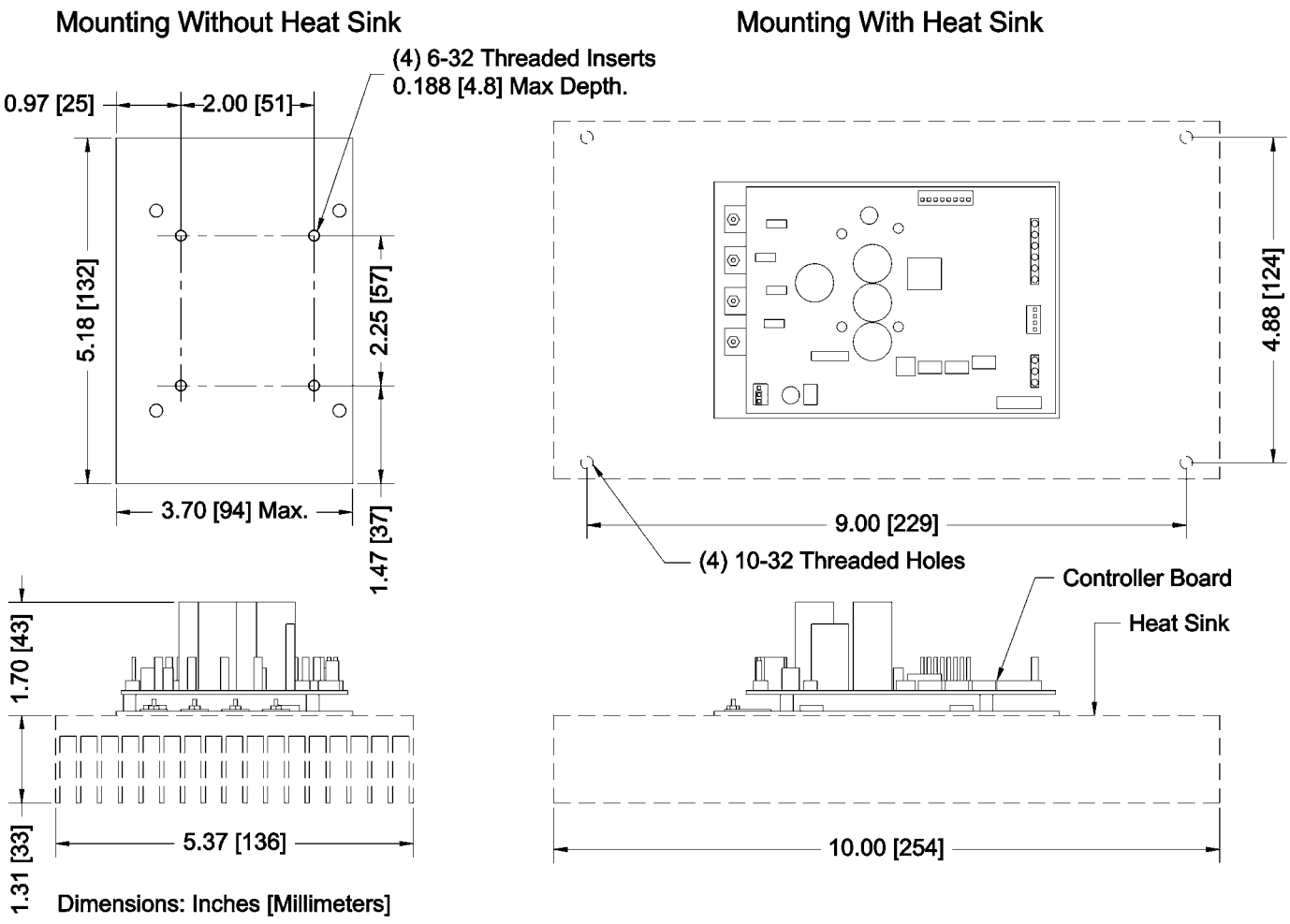

# TC-3400 | Temperature Controller

PID Temperature Control

## OVERVIEW

The TC-3400 temperature controller series simplifies your temperature control requirements.
The controller options reduce system complexity and the cost of control loop ownership. The TC-3400 is a high performance PID temperature controller in space-saving, panel-mount 1/32 DIN size EIA 485 communications and standard NEMA-4X IP66 sealing make the TC-3400 versatile and suitable for wide range of environments.

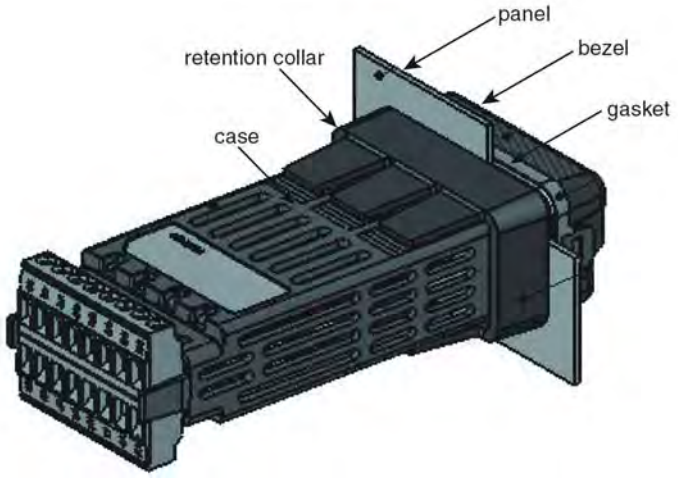


## FEATURES

**Advanced PID Control Algorithm**

- Offers TRU-Tune™ + adaptive control to provide tighter control for demanding applications
- Provides auto-tune for fast, efficient start up

**Configuration**

- Systems come preconfigured for PID cooling application
- "Canned" configuration for different applications available

**Parameter Save and Restore Memory**

- Reduce service requirment and down time

**Heat-Cool Operation**

- Provides application flexibility with accurate temperature and process control

**P3T Armor Sealing System**

- NEMA-4X and IP66 offers water and dust resistance that can be cleaned and washed down
- Backed up by UL 50 independent certification to NEMA-4X specification

## SPECIFICATIONS

**Line Voltage/Power:**
- 85 to 264V~(ac), 47 to 63Hz
- 12 to 40Vdc OR 20 to 28V~(ac), +10/-15 percent; 50/60Hz, ±5 percent
- 10VA maximum power consumption
- Data retention upon power failure via nonvolatile memory
- Compliant with SEMI F47-0200, Figure R1-1 voltage sag requirments @ 24V~(ac) or higher

**Environment:**
- -18 to 65°C (0-149°F) operating temperature
- -40 to 85°C (-40-185°F) storage temperature
- 0 to 90 percent RH, non-condensing

**Accuracy:**
- Calibration accuracy and sensor conformity ±0.1 percent of span, ±1°C @ the calibrated ambient temperature and rated line voltage
- Types R, S B; 0.2 percent
- Type T below -50°C; 0.2 percent
- Calibration ambient temperature @ 25°C ±3°C (77°F±5°F)
- Accuracy span 540°C (1000°F) minimum
- Temperature stability ±0.1°C/°C (±0.1°F/°F) rise in ambient maximum

**Agency Approvals:**
- UL®/EN 61010 Listed
- UL® 1604 Class 1 div. 2
- UL® 50, NEMA 4X, EN 60529 IP66
- CSA 610110 CE
- RoHS, W.E.E.E.

**Controller:**
- Auto-tune with TRU-TUNE™ + adaptive control algorithm
- Control sampling rates: input 10Hz, outputs 10Hz

**Wiring Termination:**
- Input, power and controller ouput terminals are touch safe removable 12 to 22 AWG

**Universal Input:**
- Thermocouple, grounded or ungrounded sensors
  >20MΩ input impedance
  3µA open sensor detection
  Maximum of 200Ω source resistance
- RTD 2- or 3-wire, platinum, 100Ω and 1000Ω @ 0°C calibration to DIN curve (0.00385Ω /Ω/°C)

**Serial Communications:**
- Isolated communications
  EIA 485, Modbus® RTU

# TC-3400

## PART NUMBER AND ORDERING

| 34 | - | x | x | x | - | x | x | - | x | x | x |
|---|---|---|---|---|---|---|---|---|---|---|---|

**Input voltage**
0: Universal AC - 85 to 264Vac, 47 to 63 Hz
4: 12/24Vdc - 12 to 40Vdc, 20 to 28Vac

**Functions**
2: Heat/Cool -No relay
3: Cooling with relay (package defined below)
4: Heating/Cooling with relays (package defined below)

**Switching Volts & Amps**
A: None, drive signal only - no relays
B: Cool only, VAC switching, 120/240Vac, 10 Amps
C: Cool Only, VDC switching, 0-100 VDC, 12 Amps
D: Cool Only, VDC switching, 0-100 VDC, 20 Amps
E: Cool Only, VDC switching, 0-100 VDC, 40 Amps
F: Heat/Cool, VDC switching, 0-100 VDC, 12 Amps
G: Heat/Cool, VDC switching, 0-100 VDC, 20 Amps
H: Heat/Cool, VDC switching, 0-100 VDC, 40 Amps
I: Heat/Cool, Heat: 120/240 VAC, 10 amps Cool: VDC switching, 0-100 VDC, 12 Amps
J: Heat/Cool, Heat: 120/240 VAC, 10 amps Cool: VDC switching, 0-100 VDC, 20 Amps
K: Heat/Cool, Heat: 120/240 VAC, 10 amps Cool: VDC switching, 0-100 VDC, 40 Amps
L: Heat/Cool, Heat: 0-100 VDC, 12 Amps Cool: VAC switching, 120/240 VAC, 10 amps
M: Heat/Cool, Heat: 0-100 VDC, 20 Amps Cool: VAC switching, 120/240 VAC, 10 amps
N: Heat/Cool, Heat: 0-100 VDC, 40 Amps Cool: VAC switching, 120/240 VAC, 10 amps
O: Heat/Cool, Reverse Polarity, 0-100 VDC, 12 Amps
P: Heat/Cool, Reverse Polarity, 0-100 VDC, 20 Amps
Q: Heat/Cool, Reverse Polarity, 0-100 VDC, 40 Amps
R: Heat/Cool, VAC switching, 120/240 VAC, 10 amps

**Sensor**
0: None
1: 3- Wire RTD - RTD-Probe
2: T type thermocouple (ring mount)

**Communications**
0: Basic communications used with standard **EZ Zone Configurator** allows the user to configure all the set up parameters including the ability to change set point, monitor the process temperature and initiate an Auto Tune
1: RS-232 complete communication for use with standard EZ Zone Configurator and optional **SpecView** or third party software, includes RS-232/RS-485 adapter
2: RS-485 complete communication for use with standard EZ Zone Configurator and optional **SpecView** or third party software

**Options**

## DIMENSIONS AND CUTOUT

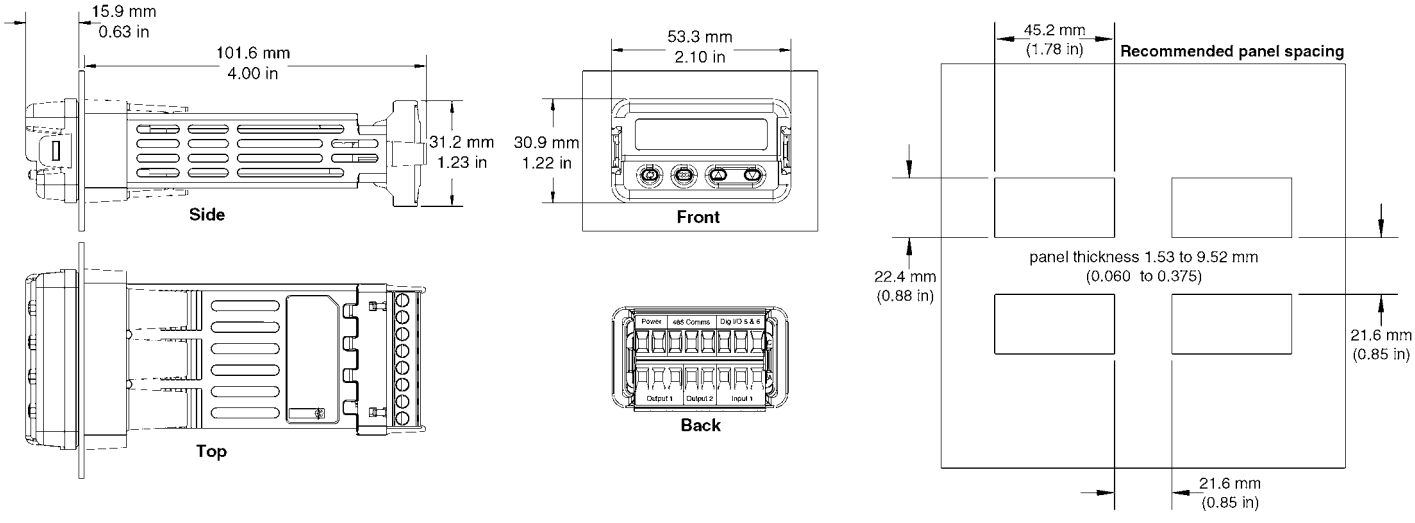

# TC-3500 | Temperature Controller

PID Temperature Control

## OVERVIEW

The TC-3500 temperature controller series simplifies your temperature control requirements.

This controller reduces system complexity and set up cost. The TC-3500 is a high performance PID temperature controller in space-saving, panel-mount size. RS485 with MODBUS-RTU (JBUS) protocol and IP 65 mounted in panel with gasket suitable for wide range of environments.

For use with reverse polarity AHP-300FFHC, AHP-300XEHC, AHP-300XHC (page 38), AHP-150FFHC, AHP-150XEHC (page 40) air conditioners and AHP-300CPHC, AHP-150CPHC (page 78) cold plates.

## SPECIFICATIONS

**Mechanical Data:**
- Housing Self-extinguishing plastic, UL 94 V0
- Dimensions 35x78 mm - depth 75,5 mm
- Weight 130 g approx
- Connections 2,5 mm2 screw terminal block
- Mounting Flush in panel in 29x71 mm hole
- Front panel protection IP 65 mounted in panel with gasket

**Electrical Data:**
- Power supply 12…24 VDC +/- 10
- Power consumption 4 VA approx.

**Input Sensor:**
- PTC Thermistor (included)

**Functional Data:**
- Control PID double action
- PID functions AUTO TUNING FAST, SELF TUNING, FUZZY OVERSHOOT CONTROL
- Multi Set Point Up to 4 programmable Set Points
- Overall accuracy +/-0,5% full scale (TC S :+/- 1% fs)
- Unit of measurement °C / °F, programmable
- Max. cold junction compensation drift 0,1°C/°C with operating temperature 0…50°C after warm-up time of 20 min.
- Sampling rate 8 sample per second
- Serial communication RS485 with MODBUS-RTU (JBUS) protocol
- Communication rate 1200…38400 baud, programmable
- Display 4 red digit h=12 mm
- Parameters access Protected by password
- Operating temperature 0…50°C
- Operating humidity 30…95 RH% without condensation

# TC-3500

## PART NUMBER AND ORDERING

| MODEL NUMBER | PART NUMBER | SWITCHING VOLTAGE VDC | SWITCHING CURRENT AMPS (MAX.) | COMMUNICATIONS |
|---|---|---|---|---|
| TC-3500 | 35-44S-30-000 | 12/24 | 7 | None |
| TC-3500 | 35-44S-32-000 | 12/24 | 7 | RS-485 |

## DIMENSIONS AND CUTOUT

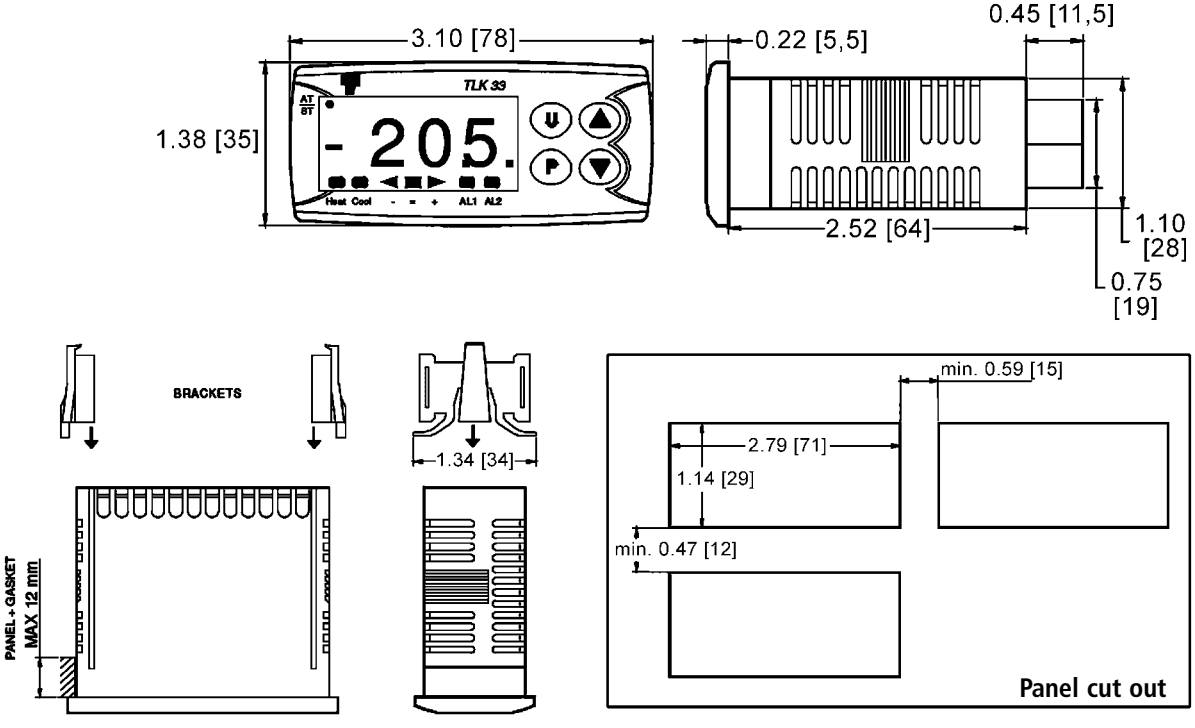


**Dimensions: Inches [Millimeters]**

## TC-1C AND TC-1H POWER TEMPERATURE SWITCHES

Models TC-1C and TC-1H power temperature controllers, with their small tolerance and reset differential, are the simplest and most cost effective way to control a cooling or heating device (VAC or VDC) without a need for a relay. For circuits that have higher current draw simply use them in conjunction with a solid state relay.

**Part Numbers:**

| Mode | Part Number | Note |
|---|---|---|
| Cool | TC-1C-**XX** | switch closes on temperature rise |
| Heat | TC-1H-**XX** | switch closes on temperature drop |

**XX:** Specify temperatures 20 °C, 25 °C, 30 °C, 35 °C for cool mode and 10°C, 15 °C for heat mode

*Example: TC-1C-20 and TC-1H-10*

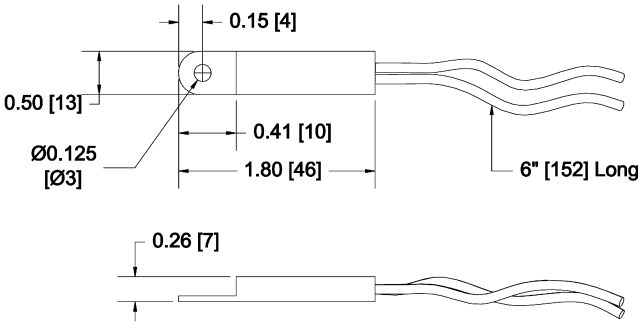


**Dimensions: Inches [Millimeters]**

### TC-1 SPECIFICATION

| VOLTAGE | CURRENT amps | SET POINT TOLERANCE °C | RESET DIFFERENTIAL °C |
|---|---|---|---|
| 125 VAC | 2 | +/- 3 | 3 - 6 |
| 250 VAC | 1.3 | +/- 3 | 3 - 6 |
| 12 VDC | 2 | +/- 3 | 3 - 6 |
| 24 VDC | 1.3 | +/- 3 | 3 - 6 |

## TC-6F COOL ONLY

Model TC-6F (Cool Only) thermostat is designed using two temperature power switches in conjunction with a solid state relay. A three position switch is provided to adjust temperature settings.

### TC-6F SPECIFICATION

| MODEL NUMBER | PART NUMBER | NOTES | TEMP @ T1 °C | TEMP @ T2 °C | T1-T2 (MAX) °C | RESET (TYP) °C | RESET °C | TEMP @ T3 | OPERATING VOLTAGE | SWITCHING VOLTAGE | SWITCHING CURRENT |
|---|---|---|---|---|---|---|---|---|---|---|---|
| TC-6F | 6F-00A-00-000 | No Relay | 35 +/- 5 | 25 +/- 5 | 10 +/- 3 | 6.5 | 3 | Continuous On | NA | NA | NA |
| TC-6F-AC | 6F-03T-00-000 | VAC Version | 35 +/- 5 | 25 +/- 5 | 10 +/- 3 | 6.5 | 3 | Continuous On | 85-250 VAC | 24-280 VAC | 10 |
| TC-6F-DC | 6F-43D-00-000 | 12/24 VDC | 35 +/- 5 | 25 +/- 5 | 10 +/- 3 | 6.5 | 3 | Continuous On | 3.5-32 VDC | 0-100 VDC | .02-20 ADC |
| TC-6F-DC | 6F-33D-00-000 | 48 VDC | 35 +/- 5 | 25 +/- 5 | 10 +/- 3 | 6.5 | 3 | Continuous On | 3.5-32 VDC | 0-100 VDC | .02-20 ADC |

## TC-3F HEAT AND COOL

Model TC-3F (Heat/Cool) thermostat incorporates the same technology as the TC-6F. It contains a single setting each for both heating and cooling as referenced below:

### TC-3F SPECIFICATION

| MODEL NUMBER | PART NUMBER | NOTES | COOL TEMP. °C | HEAT TEMP. °C | RESET (MAX) °C | RESET (TYP) °C | OPERATING VOLTAGE | SWITCHING VOLTAGE | SWITCHING CURRENT |
|---|---|---|---|---|---|---|---|---|---|
| TC-3F-AC | 3F-04R-00-000 | VAC Version | 35 +/- 5 | 15 +/- 5 | 6.5 | 3 | 85-250 VAC | 24-280 VAC | 10 AMPS |
| TC-3F-DC | 3F-44G-00-000 | 12/24 VDC | 35 +/- 5 | 15 +/- 5 | 6.5 | 3 | 3.5-32 VDC | 0-100 VDC | .02 - 20 ADC |
| TC-3F-DC* | 3F-44P-00-000 | 12/24 VDC | 35 +/- 5 | 15 +/- 5 | 6.5 | 3 | 3.5-32 VDC | 0-100 VDC | .02 - 20 ADC |

* H-Bridge relays included

## TC-7F HEAT AND COOL

Model TC-7F (Heat/Cool) thermostat incorporates the same technology as the TC-6F. It contains a single setting each for both heating and cooling and a heat exchanger mode:

### TC-7F SPECIFICATION

| MODEL NUMBER | PART NUMBER | NOTES | HX TEMP. °C | COOL TEMP. °C | HEAT TEMP. °C | RESET (MAX) °C | RESET (TYP) °C | OPERATING VOLTAGE | SWITCHING VOLTAGE | SWITCHING CURRENT |
|---|---|---|---|---|---|---|---|---|---|---|
| TC-7F-DC | 7F-24G-00-000 | 24 VDC | 20 +/- 3 | 35 +/- 3 | 10 +/- 3 | 6.5 | 3 | 24 VDC | 24 VDC | .02 - 20 ADC |

* H-Bridge relays included

## SINGLE RELAY

### Single Relay

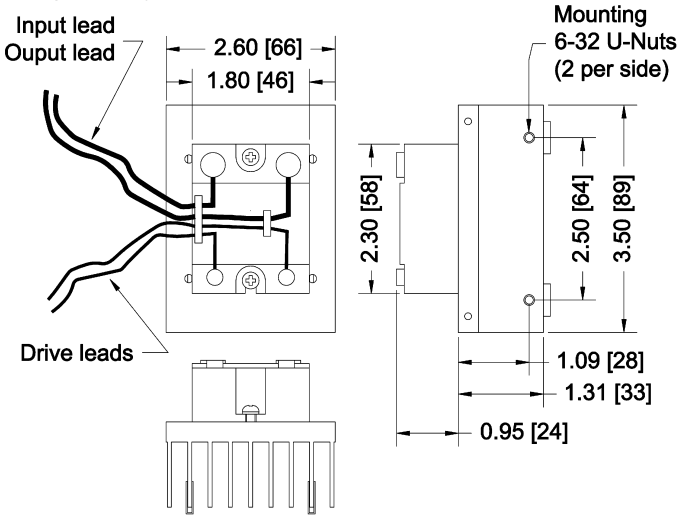


| DESCRIPTION | PART # |
|---|---|
| Cool only, DC Drive, VAC switching, 120/240 VAC, 10 AMPS | RELAY - B |
| Cool only, DC Drive, VDC switching, 0-100 VDC, 12 AMPS | RELAY - C |
| Cool only, DC Drive, VDC switching, 0-100 VDC, 20 AMPS | RELAY - D |
| Cool only, DC Drive, VDC switching, 0-100 VDC, 40 AMPS | RELAY - E |
| Cool only AC Drive, VAC switching, 0-100 VDC, 10 AMPS | RELAY - T |

### Dual Relay

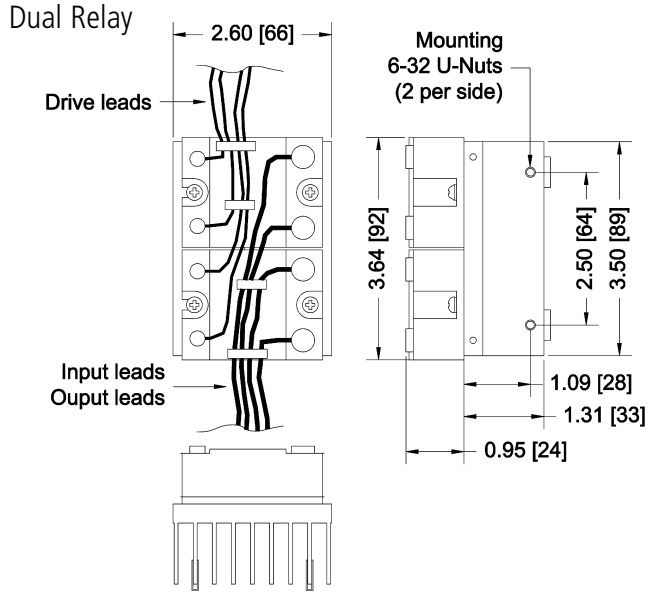


| DESCRIPTION | PART # |
|---|---|
| Heat/Cool, VDC switching, 0-100 VDC, 12 AMPS | RELAY - F |
| Heat/Cool, VDC switching, 0-100 VDC, 20 AMPS | RELAY - G |
| Heat/Cool, VDC switching, 0-100 VDC, 40 AMPS | RELAY - H |
| Heat/Cool, Heat: 120/240 VAC, 10 AMPS<br>Cool: 0-100 VDC, 12 AMPS | RELAY - I |
| Heat/Cool, Heat: 120/240 VAC, 10 AMPS<br>Cool: 0-100 VDC, 20 AMPS | RELAY - J |
| Heat/Cool, Heat: 120/240 VAC, 10 AMPS<br>Cool: 0-100 VDC, 40 AMPS | RELAY - K |
| Heat/Cool, Heat: 0-100 VDC, 12 AMPS<br>Cool: 120/240 VAC, 10 AMPS | RELAY - L |
| Heat/Cool, Heat: 0-100 VDC, 20 AMPS<br>Cool: 120/240 VAC, 10 AMPS | RELAY - M |
| Heat/Cool, Heat: 0-100 VDC, 40 AMPS<br>Cool: 120/240 VAC, 10 AMPS | RELAY - N |
| Heat/Cool, VAC switching, 120/240 VAC, 10 AMPS | RELAY - R |

### Quad (H-Bridge)

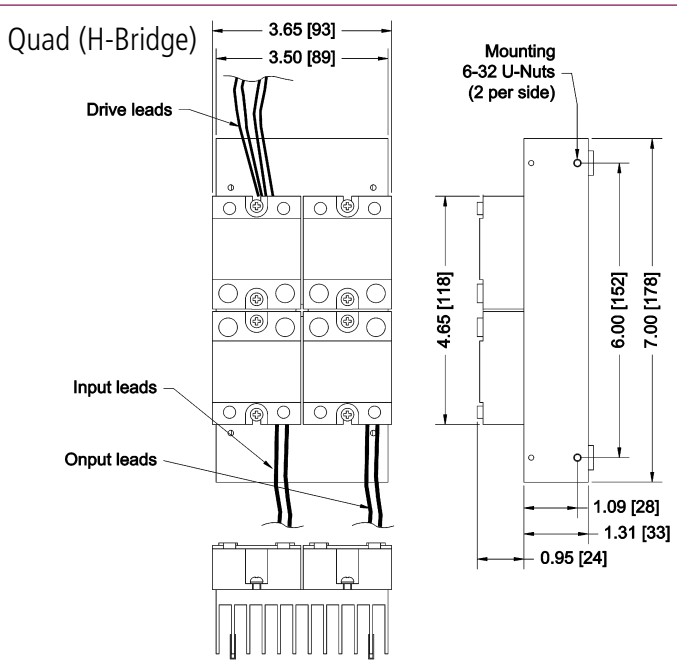


| DESCRIPTION | PART # |
|---|---|
| Heat/Cool, reverse polarity, 0-100 VDC, 12 AMPS | RELAY - O |
| Heat/Cool, reverse polarity, 0-100 VDC, 20 AMPS | RELAY - P |
| Heat/Cool, reverse polarity, 0-100 VDC, 40 AMPS | RELAY - Q |

# Accessories

## SENSORS, CABLES, ADAPTERS

| | | |
|---|---|---|
| **TTYPE-Ring** | Surface mounting "T" type thermocouple with connector | |
| **RTD-Surface** | Surface mounting 3 wire RTD with connector | |
| **RTD-Probe** | 6" long, 1/8 DIA, 3 wire RTD with connector | |
| **Probe-1/4NPT** | RTD-Probe with male 1/4 NPT compression fitting | |
| **Probe-3/8NPT** | RTD-Probe with male 3/8 NPT compression fitting | |
| Thermocouple Wire (specify length in feet)<br>"T" type **WIRE-T-XXX**<br>"J" type **WIRE-J-XXX** | | |
| RTD Wire (specify length in feet)<br>3 conductor cable **WIRE-RTD-XXX** | | |
| **C-USB** | RS-232 to USB converter | |
| **C-485/232** | RS-485 to RS-232 and RS-232 to RS-485 converter | |
| **C-RS232** | RS-232 cable | |

# POWER SUPPLIES

150, 300, 500, 800 WATTS

## SPECIFICATION

| MODEL | INPUT VOLTAGE VAC 47-63 HZ | OUTPUT VOLTAGE VDC | DC OUTPUT POWER WATTS | OUTPUT CURRENT AMPS. | WEIGHT LBS. | WORKING TEMPERATURE °C 20-90%RH | DIMENSIONS L X W X H INCHES |
|---|---|---|---|---|---|---|---|
| AS150F-12 | 88-132 OR 176-264* | 12 | 150 | 12.5 | 1.76 | -10 - 60 | 7.96X4.4X2 |
| AS150F-24 | 88-132 OR 176-264* | 24 | 150 | 6.5 | 1.76 | -10 - 60 | 7.96X4.4X2 |
| SP300-12 | 90-264 | 12 | 300 | 24 | 2.6 | -10 - 50 | 8.6X4.6X2 |
| SP300-24 | 90-264 | 24 | 300 | 12.5 | 2.6 | -10 - 50 | 8.6X4.6X2 |
| SP500-24 | 90-264 | 24 | 500 | 20.8 | 3.3 | 0 - 70 | 9.2X4.25X2.5 |
| SP800-24 | 90-264 | 24 | 800 | 33 | 3.3 | 0 - 70 | 9.2X4.25X2.5 |

* Input voltage range is switch selectable.

## DIMENSIONS

### AS-150F

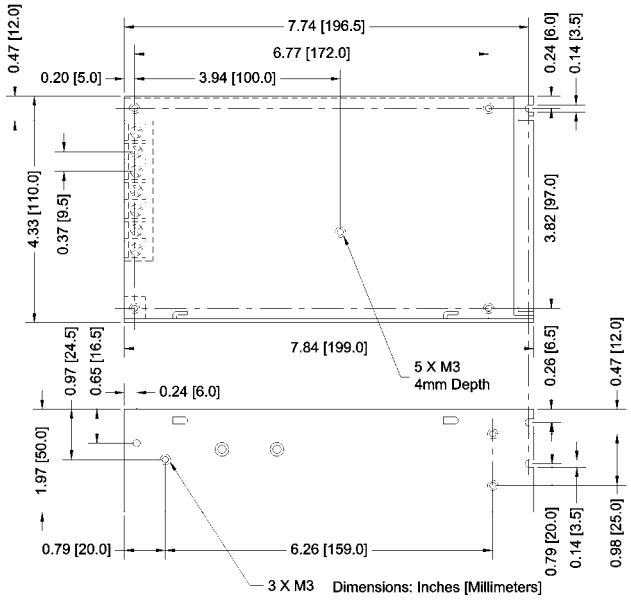


### SP-300

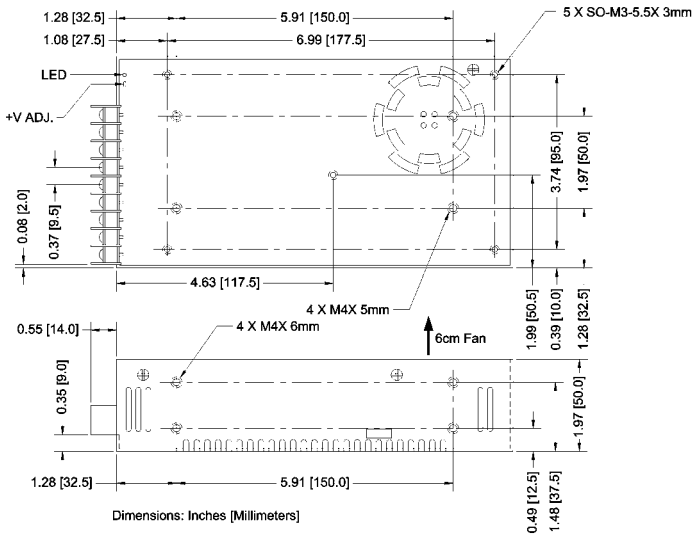


### SP-500, SP-800

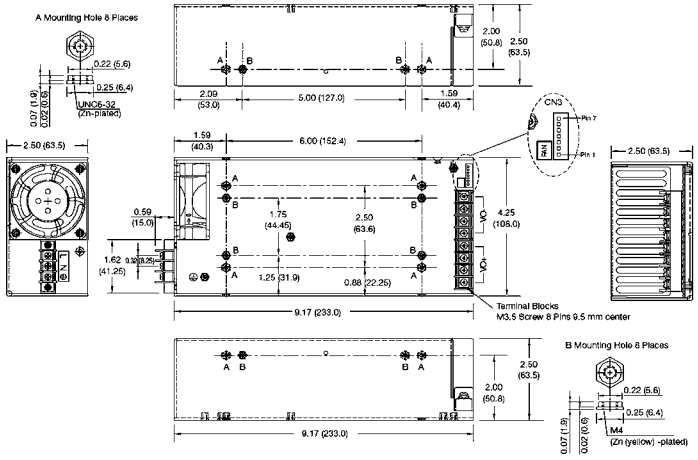

# Helpful Information

## Ordering information:

- By telephone during business hours, **773-342-4900** and **888-832-2872.**
  Monday – Friday 8 AM to 4:30 PM, Central Time.
- By fax or email 24 hours a day.
  Fax: **773-342-0191**
  email: **sales@thermoelectric.com**
- By mail on your purchase order or company letterhead.
  **Thermoelectric Cooling America Corporation**
  **4048 West Schubert, Chicago, Illinois 60639**

All orders are subject to written acceptance on our form "Acceptance of Order" with our required terms and conditions, depending upon quantity, price, availability of parts and other considerations.

## Prices:

- Prices are quoted F.O.B. Chicago and do not include sales or other taxes. Applicable taxes will be shown as a separate item on the invoice, as will charges for freight.
- Prices are in US Dollars and are subject to change without notice.

## Terms:

- Terms of payment are 30 days after shipment, subject to approved credit. New accounts must furnish necessary credit references. Until credit has been established, payment in full with order or C.O.D. may be requested. American Express, Visa and Mastercard are accepted.

## Cancellation, Schedule Changes:

- A charge of 15% of net price will be assessed for cancellation of formally accepted orders. Special part numbers containing a (CD or P) prefix are non-cancelable, non-returnable (NCNR). A 100% cancellation charge applies.
- Requests for schedule changes which defer delivery may be subject to price adjustments or other charges.

## Returned Goods, Restocking Charges:

- In order to return merchandise for any reason (repair, replacement or credit), a return authorization number must be issued by TECA.
- New merchandise may not be returned for credit beyond 60 days from shipment. Charges for incidental or other damages may also be made.
- All returned goods must be sent freight prepaid. A restocking charge of 15% will apply.

## Limited Warranty

In the event a claimed defect in material or workmanship is discovered in any of TECA's products within one year after the date they are delivered to Buyer, and if TECA is notified of the defect in writing by certified mail within 14 days of the date of discovery, then TECA may either, at its sole discretion; a) inspect the product at the Buyer's location, or; b) require that the product be made available at Buyer's expense at TECA's premises for TECA's inspection within 14 days of notification. If after such inspection TECA deems that the products are defective and the defects result from faulty materials and/or workmanship and not in any way from accident, misuse, misapplication, mishandling, modification or alteration by the Buyer or the shipper, then TECA shall, at its sole option, repair or exchange defective products free of charge to Buyer, and return same to Buyer at Buyer's expense, or credit the Buyer the net price of the defective products. ALL OTHER WARRANTIES, EXPRESS OR IMPLIED, ARE EXCLUDED, INCLUDING BUT NOT LIMITED TO THE IMPLIED WARRANTIES OF MERCHANTABILITY AND FITNESS FOR A PARTICULAR PURPOSE. IN NO EVENT SHALL TECA BE LIABLE FOR ANY CLAIM BASED ON BREACH OF EXPRESS OR IMPLIED WARRANTY OR OTHER DAMAGES WHETHER SPECIAL, INDIRECT, INCIDENTAL, CONSEQUENTIAL, LOST PROFITS, BUSINESS INTERRUPTION, OR LOSS OF BUSINESS OR CUSTOMER RELATIONSHIPS.

TECA reserves the right to change prices and discontinue catalog items without notice. we reserve the right to make changes in specifications, terms and conditions at any time without notice. Information and specifications in our catalog and on our website are believed to be accurate and reliable. TECA, however, assumes no responsibility or liability for their use, nor for the effect of design or specification changes not yet conceived or made.

**Printed in USA**